Commercial Renaissance™ Line Packaged Heat Pumps

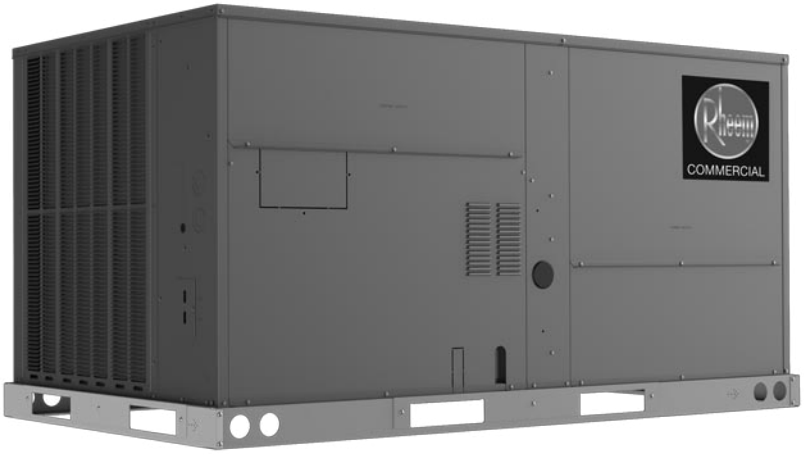

RHPCYB Commercial *Classic*® Series Packaged Heat Pump

Cooling Efficiencies up to:
3-5 Tons: 13.4 SEER2 / 10.6 EER2
6 Tons: 14.1 IEER / 11.0 EER
Nominal Sizes: 3, 4, 5 & 6 Tons
[10.6, 14.0, 17.6 & 21.1 kW]
Cooling Capacities: 34.2 kBTU to 72.0 kBTU
Refrigerant Type: R-454B
ASHRAE 90.1 2022 Compliant Models

ISO 9001:2015

c UL US LISTED

AHRI CERTIFIED™ www.ahridirectory.org
Unitary Small AC
AHRI Standard 210/240
Certification applies only when the complete system is listed with AHRI.

AHRI CERTIFIED™ www.ahridirectory.org
Unitary Large HP
AHRI Standard 340/360
Certification applies only when the complete system is listed with AHRI.

TABLE OF CONTENTS

Unit Features & Benefits 3-9
Model Number Identification 10
Options 11
Selection Procedure 12
General Data.....13-16
General Data Notes 17
Weighted Sound Power 18
Gross Systems Performance Data 19-26
Airflow Performance Data 27-30
Electrical Data.....31-41
Dimensional Data 42-44
Field-Installed Accessories.....45-69
Guide Specifications 70-75
Limited Warranty 76

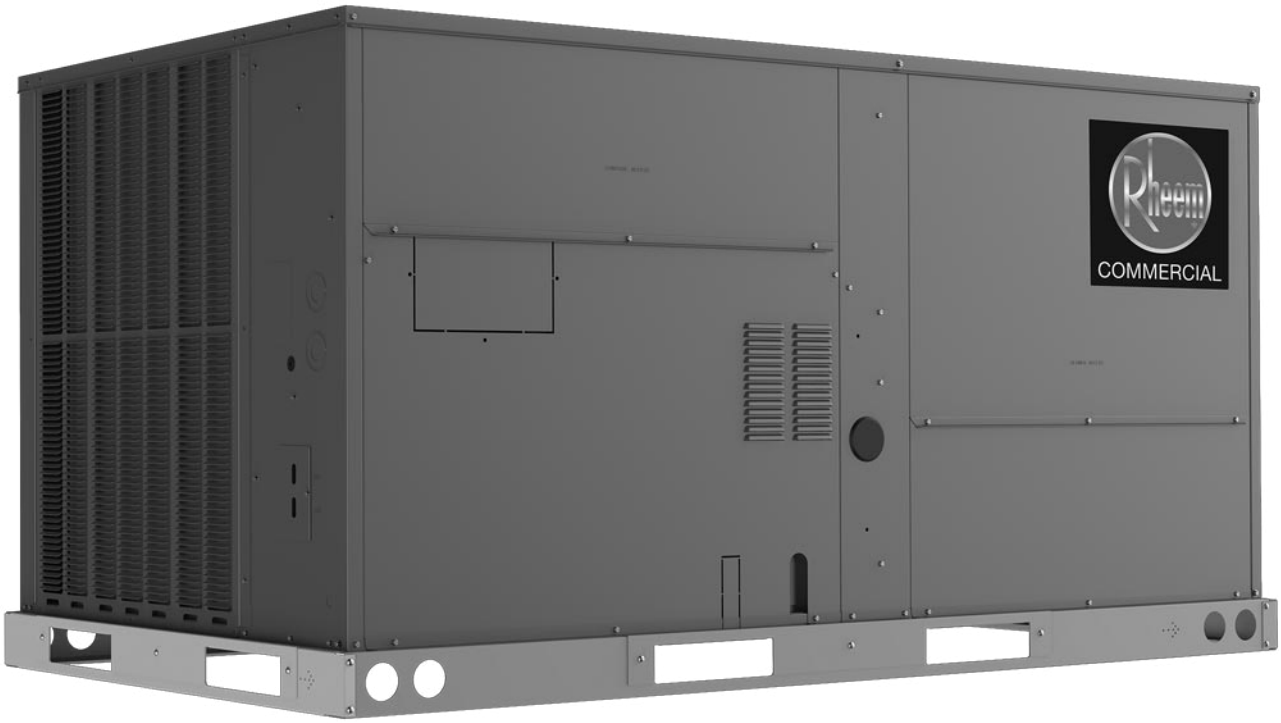

RHPC STANDARD FEATURES INCLUDE:

- Factory charged with R-454B refrigerant
- Wired and run tested
- Scroll compressors with internal line break overload and high pressure protection
- Convertible airflow – vertical down flow or horizontal side flow
- Forkable base rails for easy handling and lifting
- Cooling operation up to 125°F ambient
- MicroChannel evaporator and condenser coil
- PlusOne® ServiceSmart package includes:
  Qwik-Change Flex-Fit Rack
  Qwik-Slide Blower Assembly
  Qwik-Clean Drain Pan
- Over-flow condensate sensor
- PlusOne® Diagnostics with Dual 7-Segment LED Display to meet code compliance
- One-piece top cover and base pan with drawn supply and return opening
- Two-piece control door
- ¼ turn fasteners on filter access door
- Color-coded and labeled wiring
- External lockable gauge ports
- TXV refrigerant metering system
- Solid-core liquid line filter drier
- High pressure and low pressure/loss of charge protection with built-in Smart Logic
- Insulation encapsulated throughout entire unit
- Improved factory lead times
- 6 Ton includes a single 2-Stage compressor
- 3-5 Ton includes one single-stage compressor
- MERV 8 & MERV 13 filters are available as a field-installed accessory
- Standard Modbus interface

LOW GWP Refrigerant

Designing for Sustainability with Low GWP: For 2025, the Environmental Protection Agency (EPA) has set a global warming potential (GWP) limit of 700 for refrigerant used in heating and cooling systems. This new requirement will result in a 78%[1] lower GWP than previous-generation refrigerants — with only minimal changes to system installation. For us, this is another step toward our continued sustainability goal of reducing greenhouse gas emissions, while still delivering an exceptional level of energy efficient, dependable comfort.

[1]When comparing the GWP of R-454B to R-410A refrigerant

FACTORY-INSTALLED OPTIONS:

- Louvered panels
- Hinged access doors
- Low ambient/freeze stat
- Non-powered convenience outlet
- Economizer (Title 24 and ASHRAE 90.1 2022 compliant)
- Supply smoke detector
- Return smoke detector
- ElectroFin® E-Coat for Microchannel Condenser Coil Coating
- ClearControl™ Direct Digital Control (DDC)
- Comfort Alert® Phase-monitor Protection
- Vertical Economizer

FIELD-INSTALLED ACCESSORIES:

Accessory	Model Number	Factory Installation Available?
Comfort Alert (1 Phase) DDC	RXRX-AZ03	Yes
Comfort Alert (1 Phase) Non-DDC	RXRX-AZ04	Yes
Comfort Alert (3 Phase) DDC	RXRX-AZ01	Yes
Comfort Alert (3 Phase) Non-DDC	RXRX-AZ02	Yes
Communication Card, BACnet®	RXRX-AY01	No
Communication Card, LonWorks®	RXRX-AY02	No
Concentric Adapter 3-4 Ton Drop	RXMC-DC01	No
Concentric Adapter 5-6 Ton Drop	RXMC-DC02	No
Concentric Diffuser 3-4 Ton Drop	RXRN-AED1800	No
Concentric Diffuser 5-6 Ton Drop	RXRN-AED2000	No
Concentric Diffuser 3-4 Ton Flush	RXRN-AEF1800	No
Concentric Diffuser 5-6 Ton Flush	RXRN-AEF2000	No
Convenience Outlet, Nonpowered	RXRX-BN01	Yes
Dual Enthalpy Kit (for Honeywell® Jade™)	RXRX-BV01	No
Dual Enthalpy, Temperature and Humidity Sensor for Ruskin Basic Controller	PD955878	No
Dual Enthalpy Kit DDC (for Honeywell DDC)	RXRX-BV02	No
Dual Enthalpy, Temperature and Humidity Sensor (for Siemens®)	PD555460	No
Economizer Universal DDC Interface Kit	RXRX-DDC01	Yes
Economizer with No Controls (Downflow/Vertical) *MicroMetl Economizer, No Controls, Belimo Actuator*	RXRD-31MCDAM3	No
Economizer w/Single Enthalpy (Downflow/Vertical) *MicroMetl Economizer with Honeywell Jade Controller*	RXRD-01MCDAM3	Yes
Economizer w/Single Enthalpy (Downflow/Vertical) *MicroMetl Economizer with Siemens Controls*	RXRD-11MCDAM3	Yes
Economizer w/Single Enthalpy (Downflow/Vertical) *Ruskin Rooftop Systems® with RRS Basic Controller*	RXRD-41MCDAM3	Yes
Economizer-w/Single Enthalpy (Downflow/Vertical) DDC *MicroMetl Economizer with Honeywell DDC Controller*	RXRD-01MCDBM3	Yes
Economizer w/Single Enthalpy (Horizontal) *MicroMetl Economizer with Honeywell Jade Controller*	RXRD-01MCHAM3	No
Economizer w/Single Enthalpy (Horizontal) *MicroMetl Economizer with Siemens Controls*	RXRD-11MCHAM3	No
Economizer w/Single Enthalpy (Horizontal) *Ruskin Rooftop Systems with RRS Basic Controller*	RXRD-41MCHAM3	No
Economizer w/Single Enthalpy (Horizontal) DDC *MicroMetl Economizer with Honeywell DDC Controller*	RXRD-01MCHBM3	No
Electric Heater Kits*	RXJJ-DC10JT	Yes
	RXJJ-DC15JT	Yes

*10kW options not available on 6 Ton models.

Accessory	Model Number	Factory Installation Available?
Electric Heater Kits*	RXJJ-DC20JT	Yes
	RXJJ-DC10CP	Yes
	RXJJ-DC15CP	Yes
	RXJJ-DC20CP	Yes
	RXJJ-DC24CP	Yes
	RXJJ-DC10DNV	Yes
	RXJJ-DC15DNV	Yes
	RXJJ-DC20DNV	Yes
	RXJJ-DC24DNV	Yes
Freeze Stat Kit	RXRX-AM05	Yes
Fresh Air Damper, Manual	RXRF-ACA1	No
Fresh Air Damper, Motorized	RXRF-ACB1	No
Fresh Air Damper, Motorized (DDC)	RXRF-ACA1	No
Low-Ambient Control Kit	RXRZ-A04	Yes
MERV 8 Filter	RXMF-M08A21616	No
MERV 13 Filter	RXMF-M13A21616	No
Outdoor Coil Louver Kit	RXRX-ADD04C	Yes
Power Exhaust (230V) Horizontal *MicroMetl*	RXRX-CCF03C	No
Power Exhaust (230V) Horizontal *Ruskin Rooftop Systems*	RXRX-RCF03C	No
Power Exhaust (230V) Vertical *MicroMetl*	RXRX-CCF02C	No
Power Exhaust (230V) Vertical *Ruskin Rooftop Systems*	RXRX-RCF02C	No
Power Exhaust (460V) Horizontal *MicroMetl*	RXRX-CCF03D	No
Power Exhaust (460V) Horizontal *Ruskin Rooftop Systems*	RXRX-RCF03D	No
Power Exhaust (460V) Vertical Micro*Metl*	RXRX-CCF02D	No
Power Exhaust (460V) Vertical *Ruskin Rooftop Systems*	RXRX-RCF02D	No
Roofcurb, 14"	RXKG-DCC14	No
Roofcurb, 24"	RXKG-DCC24	No
Roofcurb Adapter	RXRX-DCCAE	No
Sensor, Carbon Dioxide (Wall Mount)	RXRX-AR02	No
Sensor, Room Humidity	RHC-ZNS4	No
Sensor, Room Temperature and Relative Humidity	RHC-ZNS5	No
Single Point Wiring Kits	RXJX-AJ0601 (Single Phase)	No
	RXJX-AZ0601 (Three Phase)	No
Smoke Detector, Return (Field kit)	RXRX-BS01	No
Smoke Detector, Return/Supply (Field kit)	RXRX-BS02	No
Unfused Service Disconnect	RXRX-BP01	Yes

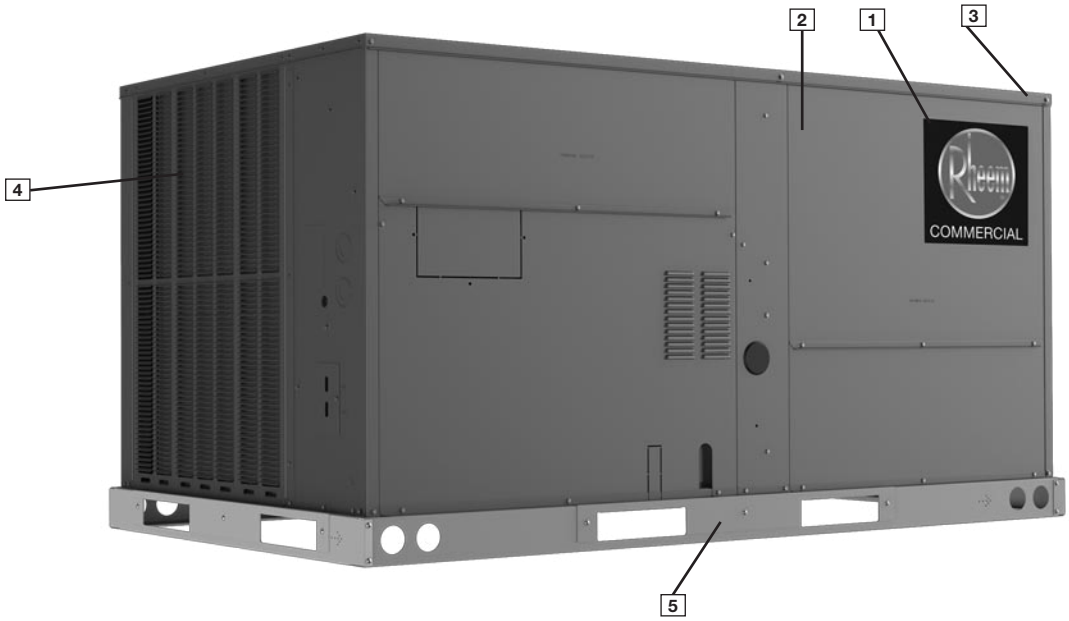

Cabinet and Foundation

Outwardly, the large *Rheem® Commercial Series* label **(1)** identifies the brand to the customer. The sheet-metal cabinet **(2)** uses 18-gauge material for structural components with an under coat of G90. To ensure the leak-proof integrity of these units, the design utilizes a one-piece top with a 1/8" drip lip **(3)** as well as gasket-protected panels and screws. The Rheem hail guard (optional) **(4)** sets the standard for coil protection in the industry. Electro deposition, baked-on enamel that is tested to withstand a rigorous 1000-hour salt spray test, per ASTM B117.

Anything built to last must start with the right foundation. Following that model, the foundation is comprised of 14-gauge, commercial-grade, full perimeter base rails **(5)** that integrate fork slots and rigging holes to save set-up time on the job site.

Easy Installation

The Renaissance line is designed to simplify the installation and replacement process with a footprint that matches existing airflow inlets, outlets and electrical connections to commonly used curb configurations in the market today.

Base Pan

The base pan is stamped to form a 7/8" flange around the supply and return cover, which eliminates the worry of water entering the conditioned space **(6)**. All insulation is secured with both adhesive and mechanical fasteners, and all edges are hidden.

Drain Pan

The Qwik-Clean Drain Pan **(7)** is made from a composite material that resists the growth of harmful bacteria. With both side and center drain options, the drain pan slides out completely for easy cleaning. It also features a standard overflow switch.

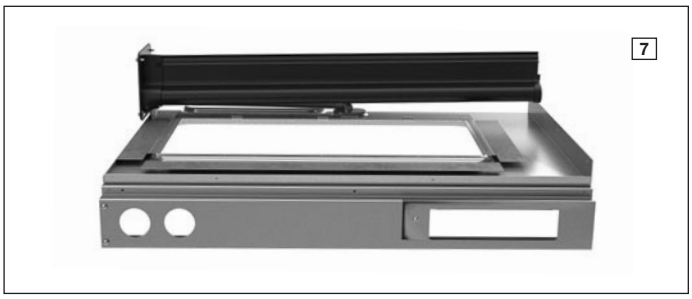

Test Standards

During development, each unit was tested to U.L. 60335-2-40, AHRI 210/240 (3-5 ton) or AHRI 340/360 (6 ton), as well as other Rheem-required reliability tests. Rheem adheres to stringent ISO 9001 quality procedures, and each unit bears the U.L. and AHRI certification labels located on the unit nameplate. Contractors can be assured that when a Rheem packaged unit arrives at the job, it is ready to go with a factory charge and quality checks.

Easy Access

All major compartments are easily accessible from the front of the unit: the electrical compartment, blower compartment, heating section, and outdoor section. Each compartment has mechanical fasteners. Panels are permanently embossed with the compartment name (e.g. control/filter access, blower access, and electric heat access). The filter compartment is accessed through a large, mechanically fastened panel. Information is readily available on the outside of the panel, with a nameplate that contains the model and serial numbers, electrical data, and other important unit information. Hinged access is available as an option for the electrical, blower, and filter compartments.

Charging Charts, Wiring Diagrams, & Labels

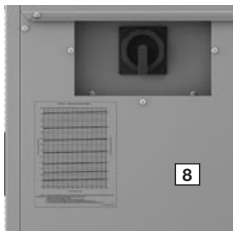

The unit charging chart is located on the outside of the compressor access panel. Electrical wiring diagrams are found on the control box cover, which allows contractors to move them to more readable locations. The model and serial numbers are located on the right of the control box. Having this information on the inside means easier model identification for the life of the product. The production line quality test assurance label is also placed in this location **(8)**.

Filter Rack

Located within the filter compartment, the Qwik-Change Flex-Fit Rack **(9)** allows easy changeover between 2" and 4" standard size and readily available filters.

Blower Assembly

Removing three screws provides full access to the blower compartment. Inside, the Qwik-Slide Blower Assembly **(10)** is incredibly easy to access and remove. This makes servicing internal components such as blower motor, TXV, and microchannel coil much easier. The entire assembly slides out by removing the 3/8" screws from the blower retention bracket.

Where the demands for the job require high static, Rheem offers drives **(11)** that deliver nominal airflow up to 1.5" of static. By referring to the airflow performance tables listed in the installation instructions, proper static pressure and CFM requirements can be dialed in. The scroll housing **(12)** and blower scroll provide quiet and efficient airflow.

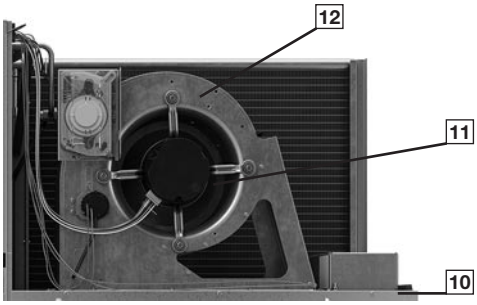

High and Low Pressure Switches & Freeze Stat

High pressure **(13)** and low pressure **(14)** switches are standard. They are located in the outdoor section along with the low-ambient control **(15)**. The optional Freeze Stat **(16)** (standard on models with ClearControl), is clipped onto the suction line in the blower compartment. The low ambient control allows the compressor to operate down to 0 degrees ambient temperature by cycling the outdoor fans on high pressure. The high-pressure switch shuts off the compressors if pressures exceeding 610 PSIG are detected. The low-pressure switch shuts off the compressors if low pressure is detected due to loss of charge. Built-in Smart Logic reduces nuisance calls by only shutting off compressors after the third detection. The freeze stat protects the compressor if the evaporator coil gets too cold (below freezing) due to low airflow.

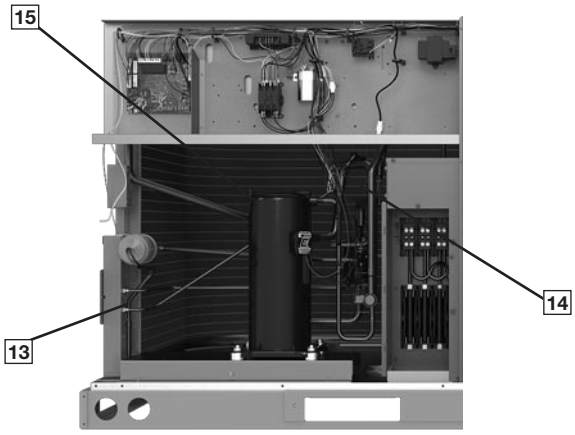

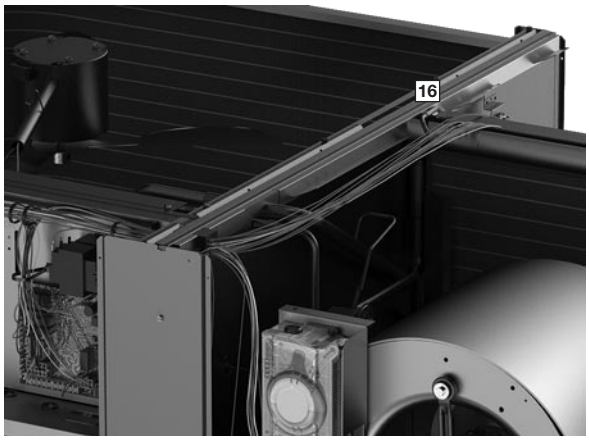

MicroChannel Evaporator & TXV

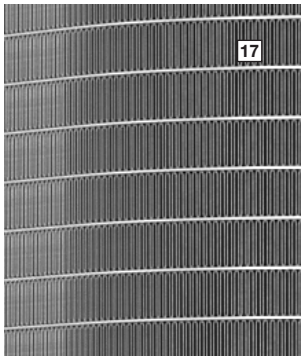

The Microchannel Evaporator **(17)** is accessible through the blower compartment, and through the filter rack, to simplify cleaning. The evaporator uses microchannel technology for maximum heat transfer, light weight, fewer manually brazed connections and reduced refrigerant charge. The TXV metering device maintains superheat over a wide range of varying temperatures optimizing unit performance for all conditions.

Control Box

Inside the control box **(18)**, each electrical component is clearly labeled; that label matches the component to the wire diagram for ease of trouble shooting. All wiring is numbered on each end of the termination and is color-coded to match the wiring diagram. The CoreCommand, incorporates the PlusOne Diagnostics: Dual 7-Segment LED Display **(19)** with easy-to-understand fault codes. The control transformer has a low voltage circuit breaker that trips if an electrical short occurs.

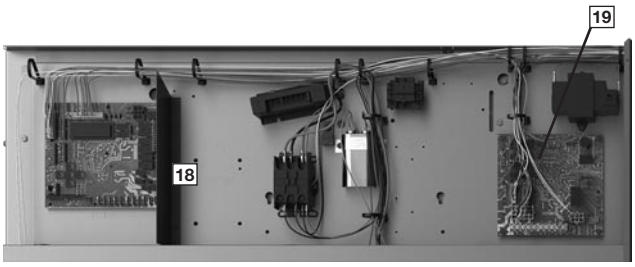

ClearControl DDC System

The optional ClearControl Direct Digital Control (DDC) system consisting of a rooftop unit controller, temperature sensors, and pressure sensors, allows real-time monitoring and communication between rooftop units. The Rooftop Unit Controller (RTU-C) that is factory mounted and wired into the control panel. The RTU-C is a solid-state, microprocessor-based control board that provides flexible control and extensive diagnostics for all unit functions. The RTU-C, using proportional/integral control algorithms, performs specific unit functions that govern unit operation in response to zone conditions, system temperatures, system pressures, ambient conditions, and electrical inputs. The RTU-C features a 16 x 2 character LCD display and a five-button keypad for local configuration and direct diagnosis of the system **(20)**. Features include a clogged filter switch (CFS), fan proving switch (FPS), return air temperature sensor (RAT), discharge air temperature sensor (DAT), and outdoor air temperature sensor (OAT). Freeze sensors (FS) are used in place of freeze stats to allow measurement of refrigerant suction line temperatures.

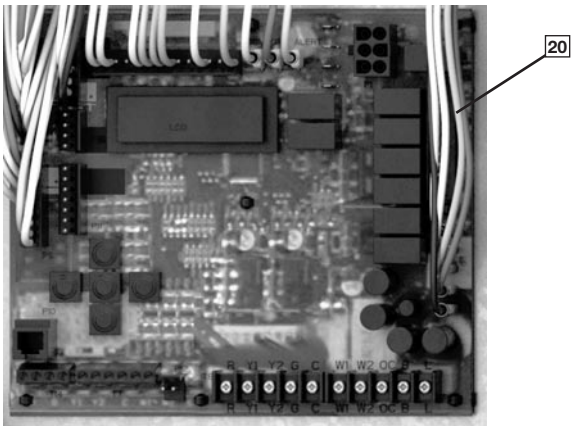

The RHPC Cooling only with the RTU-C is specifically designed to be applied in four distinct applications:

1. **BACnet Communication —** The RHPC is compatible with a third party building management system that supports the BACnet Application Specific Controller device profile, with the use of a field-installed BACnet Communication Module. The BACnet Communication Module plugs onto the unit RTU-C controller and allows communication between the RTU-C and the BACnet MSTP network. A zone sensor, a BACnet network zone sensor, a BACnet thermostat, or DDC controller may be used to send the zone temperature or thermostat demands to the RTU-C. The BACnet Communication Module is compatible with MSTP EIA-485 daisy chain networks communicating at 38.4 bps. It is compatible with twisted pair, shielded cables.

2. **LonWorks Communication —** The RHPC is compatible with a third party building management system that supports the LonMark Space Comfort Controller (SCC) functional profile or LonMark Discharge Air Controller (DAC) functional profile. This is accomplished with a field-installed LonMark communication module. The LonMark Communication Module plugs onto the RTU-C controller and allows communication between the RTU-C and a LonWorks network. A zone sensor, a LonTalk network zone sensor, or a LonTalk thermostat or DDC controller may be used to send the zone temperature or thermostat demands to the RTU-C. The LonMark Communication Module utilizes an FTT-10A free topology transceiver communicating at 78.8 kbps. It is compatible with Echelon qualified, twisted pair cable, Belden 8471, or NEMA Level 4 cables. The module can communicate up to 1640 feet with no repeater. The LonWorks limit of 64 nodes per segment applies to this device.

3. **24V Thermostat Compatibility —** The RHPC is compatible with a programmable 24 volt thermostat. Connections are made via conventional thermostat screw terminals. Extensive unit status and diagnostics are displayed on the LCD screen of the RTU-C.

4. **Zone Sensor Compatibility —** The RHPC is compatible with a zone sensor and a mechanical or solid state time clock connected to the RTU-C. Extensive unit status and diagnostics are displayed on the LCD screen of the RTU-C.

Comfort Alert

A factory or field-installed Comfort Alert **(21)** module is available for power phase-monitoring protection and additional compressor diagnostics. The alarms can be displayed on the RTU-C display, through the (BAS) network, or connected to the “L-Terminal” of a thermostat for notification.

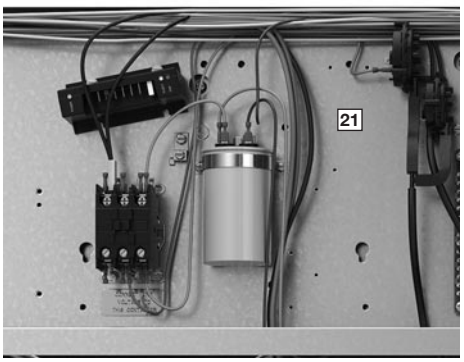

Convenience Outlet, Disconnect, & Circuit Breaker

The convenience outlet option comes non-powered from the factory **(23)**. Low and high voltage can enter from the side or through the base. Low-voltage connections are made through the low-voltage terminal strip. For ease of access, the U.L.-required low voltage barrier can be temporarily removed for low-voltage termination and then reinstalled. The high-voltage connection is terminated at the number 1 compressor contactor. The suggested mounting for the field-installed disconnect or circuit breaker is on the exterior side of the electrical control box.

External Lockable Gauge Ports

To the right left of the compressor compartment are the externally mounted lockable gauge ports. They are permanently identified by embossed lettering that identifies the compressor circuit, high pressure connection, **(25)** and low pressure connection **(26)**. Because the gauge ports are mounted externally, an accurate diagnostic of system operation can be performed without removing access panels. The plastic caps on the Shrader fitting ensure the gauge ports are leak proof, and the red cover on the caps indicates that this unit is charged with A2L refrigerant.

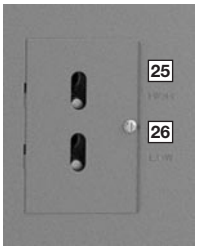

Compressor

The compressor compartment houses the heartbeat of the unit. The scroll compressor **(30)** is known for its long life and for reliable, quiet, and efficient operation. The suction and discharge lines are designed with shock loops **(31)** to absorb the strain and stress that the starting torque, steady state operation, and shut-down cycle impose on the refrigerant tubing. 6-Ton model includes 2-Stage scroll compressor as standard, 3-5 ton models include one single-stage compressor.

Condenser Fans

The condenser fan motor **(32)** can easily be accessed and maintained through the top of the unit. A down-mount fan provides corrosion protection and easy removal. The polarized plug connection allows the motor to be changed quickly and eliminates the need to snake wires through the unit.

MicroChannel Condenser Technology

The outdoor coil uses the latest microchannel technology **(33)** for the most effective method of heat transfer. The outdoor coil is protected by optional louvered panels, which allow unobstructed airflow while protecting the unit from both the environment and vandalism.

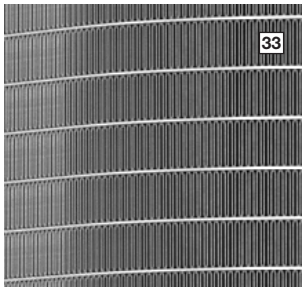

Coil Coating

Every unit offers the option of factory-applied ElectroFin E-Coat condenser coating **(34)** that delivers superior corrosion resistance for outdoor coils to operate in the harshest of environments.

Economizer and Dampers

Each unit is designed for both down flow or horizontal applications (35) for job configuration flexibility. The return air compartment can also contain an economizer. Each unit is pre-wired for the economizer to allow quick, plug-in installation. Available as a factory-installed option, the economizer provides free cooling when outdoor conditions are suitable and also provides fresh air to meet local requirements. It comes standard with single enthalpy controls, which can be upgraded to dual enthalpy easily in the field. The economizer control has a minimum position set point, an outdoor-air set point, a mixed-air set point, and a CO_2 set point. Barometric relief is standard on all economizers.

Power Exhaust is easily field-installed. The power exhaust is housed in the barometric relief opening and is easily slipped in with a plugin assembly. The wire harness to the economizer also has accommodations for a smoke detector.

The damper minimum position, actual damper position, power exhaust on/off set point, mixed air temperature limit set point, and Demand Controlled Ventilation (DCV) set point can be read and adjusted at the unit controller display or remotely through a network connection. The Space CO_2 level, mixed air temperature, and Economizer Status (free cooling available, single or dual enthalpy) can be read at the unit controller display or remotely through a network connection. Economizer faults will trigger a network alarm and can be read at the unit controller display or remotely through a network connection.

Roofcurb

The Rheem roofcurb (36) is made for tool-less assembly at the jobsite by engaging tabs in slots of adjacent curb sides, which makes the assembly process quick and easy.

Refrigerant Leak Detection

In the event of a detected refrigerant leak, the refrigerant leak detection sensor will trigger mitigation procedure that shuts off the compressor(s) and turns on the indoor blower motor.

The sensor is installed on the bracket facing the filter rack. From the outside of the unit, the sensor is not visible.

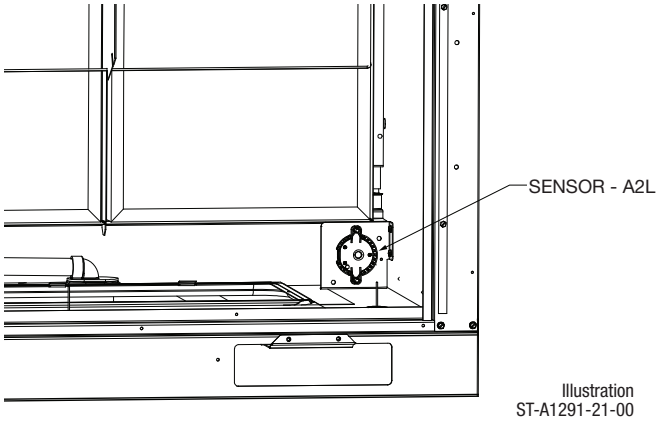

Illustration
ST-A1291-21-00

R	HP	C	Y	B	036	A	C	T	10	2	A	A	***
1	23	4	5	6	789	10	11	12	13 14	15	16	17	18 19 20

1—Brand
R = Rheem

2, 3—Unit Type
HP = Packaged HP

4—Cabinet Type
C = Small Commercial

5—Refrigerant
Y = R-454B

6—Efficiency Level
B = Standard Efficiency

7, 8, 9—Capacity
036 = 3 Ton
048 = 4 Ton
060 = 5 Ton
072 = 6 Ton

10—Major series
A = 1st Design

11—Voltage
J = 1 PH, 208-230 V, 60 Hz
C = 3 PH, 208-230 V, 60 Hz
D = 3 PH, 460 V, 60 Hz

12—Drive
T = Direct Drive Standard Static Constant Torque
U = Direct Drive High Static Constant Torque

13, 14—Heat Capacity
00 = No Heat
10 = 10 kW
15 = 15 kW
20 = 20 kW
24 = 24 kW

15—Heat Configuration
0 = No stages
1 = 1-stage
2 = 2-stage

16—Control
A = CoreCommand™ (Non-Communicating)
B = CoreCommand & Comfort Alert®
C = ClearControl™ (DDC)
D = ClearControl (DDC) & Comfort Alert

17—Minor series
A = 1st Design

18, 19, 20—Option Code
See next page

NOTES:

1. J voltage is not available on 6 Ton models
2. U drive is not available with J voltage

Comfort Alert® is a registered trademark owned by Copeland LP

FACTORY-INSTALLED OPTION CODES FOR RHPC (3 TO 6 TON)

18				19			20			
LV = Louver protection				LF = Low Ambient / Freeze Stat			EC = Economizer			
HA = Hinged Access				NP = Non-powered Convenience Outlet			SS = Supply and Return Smoke Detector			
CC[2] = Coil Coating							RS = Return Smoke Detector			
Option code character highlighted below										
A	None			**A**	None		**0**	None		
B	LV			**B**	LF		**1**	EC		
C	HA			**C**	NP		**2**	RS		
D	LV	HA		**D**	LF	NP	**3**	EC	RS	
E	LV	CC					**4**	SS	RS	
F	LV	HA	CC				**5**	EC	SS	RS

[2]CC-requires LV (louver protection)

Instructions for Factory-Installed Option(s) Selection

Note: Three characters following the model number will be utilized to designate a factory-installed option or combination of options. If no factory option(s) is required, “AAO” follows the model number.

- **Step 1:** In the table above, based on the desired features, choose option code character from highlighted options on the left side under the number 18. For example, the option code character “E” has Louver protection and Coil Coating.
- **Step 2:** In the table above, based on the desired features, choose option code character from highlighted options on the left side under the number 19. For example, the option code character “F” has Low Ambient / Freeze Stat and Disconnect switch.
- **Step 3:** In the table above, based on the desired features, choose option code character from highlighted options on the left side under the number 20. For example, the option code character “3” has Economizer and Return Smoke.
- The resulting option code from examples above is: “EF3”
- **Step 4:** Add your option code selection to the end of model number
  - Example: RHPCYB036ACT000AA EF3 = RHPCYB036ACT000AAEF3

Base model Option code = Model number with option code

To select an RHPC Cooling and Heating unit to meet a job requirement, follow this procedure, with example, using data supplied in this specification sheet.

1. **DETERMINE COOLING AND HEATING REQUIREMENTS AND SPECIFIC OPERATING CONDITIONS FROM PLANS AND SPECS.**

   Example:

Voltage—	230 V – 3 Phase – 60 Hz
Total Cooling Capacity—	47,000 BTUH [13.8 kW]
Sensible Cooling Capacity—	36,000 BTUH [10.6 kW]
Heating Capacity—	40,000 BTUH [10 kW]
*Condenser Entering Air—	95°F [35.0°C] DB
*Evaporator Mixed Air Entering—	67°F [19.4°C] WB
	78°F [25.6°C] DB
*Indoor Air Flow (vertical)—	1600 CFM [755 L/s]
*External Static Pressure—	0.6 in. WG [.15 kPa]

2. **SELECT UNIT TO MEET COOLING REQUIREMENTS.**

   Since total cooling is within range of a nominal 4-ton unit, use the cooling performance table at 95°F DB condenser inlet air. Interpolate between 1730 CFM [816 L/s] and 1400 CFM [660 L/s] to determine total and sensible capacity and Depression Ratio for inlet air at 1600CFM [755 L/s] indoor airflow (table basis)

   Interpolation Formula:

$$MBH_1 + \left[(CFM - CFM_1) \times \left(\frac{MBH_2 - MBH_1}{CFM_2 - CFM_1}\right)\right] = MBH$$

   Total Cooling Capacity:

$$46{,}800 + \left[(1{,}600 - 1{,}730) \times \left(\frac{45{,}200 - 46{,}800}{1{,}400 - 1{,}730}\right)\right] = 46{,}170 \text{ BTUH}$$

   Total Cooling Capacity = 46,170 BTUH [13.5 kW]
   Sensible Cooling Capacity = 33,7400 BTUH [9.9 kW]
   DR = 0.2

   When the entering dry bulb temperature (dbE) is not 80°F [26.7°C], the sensible capacity needs to be adjusted.
   Note: total capacity is unaffected

   Sensible Capacity Depression Formula:

   $Cap_{sensible}$ + [1.10 x CFM x (1 – DR) x (dbE – 80)]

   = 33,740 + [1.10 x 1,600 x (1 – 0.2) x (78 – 80)]
   Sensible Cooling Capacity = 30,924 BTUH [9.1 kW]

3. **DETERMINE BLOWER SPEED AND BHP TO MEET SYSTEM DESIGN.**

   Total ESP (external static pressure) per the spec of 0.6 in WG [.15 kPa] includes the system duct and grilles. Add from the table "Component Air Resistance," 0.13 in. WG [0.04 kPa] for wet coil. Using the "Airflow Performance Table", at the specified 1,600 CFM and 0.7 in. WG [0.17 kPa] ESP, determine blower wattage.

   CFM = 1564
   Watts = 440
   Tap = 5

4. **CALCULATE INDOOR BLOWER BTUH HEAT EFFECT FROM MOTOR BHP IN STEP 3.**

   Assuming an average of 85% motor efficiency, determine the amount of heat generated by the blower motor at the specified CFM and ESP by dividing the watts used by the motor efficiency and solving for the difference. Convert this value from watts to BTUH, multiplying by 3.41 BTUH/Watt

   Watts = 440
   Avg. Motor Efficiency = 85%

$$\text{Indoor Blower Motor Heat} = \left[\left(\frac{\text{Watts}}{0.85}\right) - \text{Watts}\right] \times 3.41$$

   = [(440/0.85)–440] x 3.41 = 77.6 BTUH [0.02 kW]

5. **CALCULATE THE NET COOLING CAPACITIES**

   Net cooling capacities can be calculated by subtracting the motor heat from the gross cooling capacities.

   Net Total Capacity = Gross Total Capacity – Indoor Blower Motor Heat

   = 46,170 – 77 = 46,093 BTUH [13.5 kW]

   Net Sensible Capacity = Gross Sensible Capacity – Indoor Blower Motor Heat

   = 30,924 – 77 = 30,847 BTUH [9.0 kW]

6. **CHOOSE MODEL** RHPCYB048ACT

[ ] Designates Metric Conversions

NOM. SIZES 3–6 TONS [10.6–21.1 kW]

Model RHPCYB Series	036ACT 036ADT 036AJT	036ACU	036ADU
Cooling Performance[A]			CONTINUED
Nominal Cooling Capacity Btu/h [kW]	36,000 [10.55]	36,000 [10.55]	36,000 [10.55]
EER2[B]	10.6	10.6	10.6
SEER2[B]	13.4	13.4	13.4
Nominal CFM [L/s]	1200 [566]	1200 [566]	1200 [566]
AHRI Rated CFM [L/s]	1175 [555]	1175 [555]	1175 [555]
AHRI Net Cooling Capacity Btu/h [kW]	34200 [10.02]	34200 [10.02]	34200 [10.02]
Net Sensible Capacity Btu/h [kW]	25600 [7.5]	25600 [7.5]	25600 [7.5]
Net Latent Capacity Btu/h [kW]	8600 [2.52]	8600 [2.52]	8600 [2.52]
Net System Power kW	3.2	3.2	3.2
Heating Performance (Heat Pumps)			
High Temp. Btu/h [kW] Rating	34200 [10.02]	34200 [10.02]	34200 [10.02]
System Power KW/COP	2.64/3.8	2.64/3.8	2.64/3.8
Low Temp. Btu/h [kW] Rating	21600 [6.33]	21600 [6.33]	21600 [6.33]
System Power KW/COP	2.53/2.5	2.53/2.5	2.53/2.5
HSPF2 (Btu/Watts-hr)	6.7	6.7	6.7
Compressor			
No./Type	1/Scroll	1/Scroll	1/Scroll
No./Stages	1	1	1
Outdoor Sound Rating (dB)[D]	78	78	78
Outdoor Coil - Fin Type	Louvered	Louvered	Louvered
Tube Type	MicroChannel	MicroChannel	MicroChannel
MicroChannel Depth in. [mm]	0.63 [16]	0.63 [16]	0.63 [16]
Face Area sq. ft. [sq. m]	15.75 [1.46]	15.75 [1.46]	15.75 [1.46]
Rows/FPI [FPcm]	1/16 [6]	1/16 [6]	1/16 [6]
Refrigerant Control	TX Valves	TX Valves	TX Valves
Indoor Coil - Fin Type	Louvered	Louvered	Louvered
Tube Type	MicroChannel	MicroChannel	MicroChannel
MicroChannel Depth in. [mm]	1.00 [25.4]	1.00 [25.4]	1.00 [25.4]
Face Area sq. ft. [sq. m]	7.48 [0.7]	7.48 [0.7]	7.48 [0.7]
Rows/FPI [FPcm]	1/20 [8]	1/20 [8]	1/20 [8]
Refrigerant Control	TX Valves	TX Valves	TX Valves
Drain Connection No./Size in. [mm]	1/0.75 [19.05]	1/0.75 [19.05]	1/0.75 [19.05]
Outdoor Fan - Type	Propeller	Propeller	Propeller
No. Used/Diameter in. [mm]	1/26 [660.4]	1/26 [660.4]	1/26 [660.4]
Drive Type/No. Speeds	Direct/1	Direct/1	Direct/1
CFM [L/s]	5100 [2407]	5100 [2407]	5100 [2407]
No. Motors/HP	1 at 1/5 HP	1 at 1/5 HP	1 at 1/5 HP
Motor RPM	850	850	850
Indoor Fan - Type	532	FC Centrifugal	FC Centrifugal
No. Used/Diameter in. [mm]	1/11x11 [279x279]	1/11x11 [279x279]	1/11x11 [279x279]
Drive Type	Direct	Direct	Direct
No. Speeds	Multiple	Multiple	Multiple
No. Motors	1	1	1
Motor HP	3/4	1-1/2	1
Motor RPM	1050	1050	1050
Motor Frame Size	48	48	48
Filter - Type	Disposable	Disposable	Disposable
Furnished	Yes	Yes	Yes
(NO.) Size Recommended in. [mm x mm x mm]	(4)2x16x16 [51x406x406]	(4)2x16x16 [51x406x406]	(4)2x16x16 [51x406x406]
Refrigerant Charge Oz. [g]	84 [2381]	84 [2381]	84 [2381]
Weights			
Net Weight lbs. [kg]	532 [232]	538 [235]	538 [235]
Ship Weight lbs. [kg]	570 [249]	576 [251]	576 [251]

See Page 17 for Notes.

[ ] Designates Metric Conversions

NOM. SIZES 3–6 TONS [10.6–21.1 kW]

Model RHPCYB Series	048ACT 048ADT 048AJT	048ACU	048ADU
Cooling Performance[A]			CONTINUED →
Nominal Cooling Capacity Btu/h [kW]	48000 [14.07]	48000 [14.07]	48000 [14.07]
EER2[B]	10.6	10.6	10.6
SEER2[B]	13.4	13.4	13.4
Nominal CFM [L/s]	1600 [755]	1600 [755]	1600 [755]
AHRI Rated CFM [L/s]	1460 [689]	1460 [689]	1460 [689]
AHRI Net Cooling Capacity Btu/h [kW]	45500 [13.34]	45500 [13.34]	45500 [13.34]
Net Sensible Capacity Btu/h [kW]	34200 [10.02]	34200 [10.02]	34200 [10.02]
Net Latent Capacity Btu/h [kW]	11300 [3.31]	11300 [3.31]	11300 [3.31]
Net System Power kW	4.3	4.3	4.3
Heating Performance (Heat Pumps)			
High Temp. Btu/h [kW] Rating	45500 [13.34]	45500 [13.34]	45500 [13.34]
System Power KW/COP	3.92/3.4	3.92/3.4	3.92/3.4
Low Temp. Btu/h [kW] Rating	26600 [7.8]	26600 [7.8]	26600 [7.8]
System Power KW/COP	3.54/2.2	3.54/2.2	3.54/2.2
HSPF2 (Btu/Watts-hr)	6.7	6.7	6.7
Compressor			
No./Type	1/Scroll	1/Scroll	1/Scroll
No./Stages	1	1	1
Outdoor Sound Rating (dB)[D]	86	86	86
Outdoor Coil - Fin Type	Louvered	Louvered	Louvered
Tube Type	MicroChannel	MicroChannel	MicroChannel
MicroChannel Depth in. [mm]	1.26 [32]	1.26 [32]	1.26 [32]
Face Area sq. ft. [sq. m]	15.52 [1.44]	15.52 [1.44]	15.52 [1.44]
Rows/FPI [FPcm]	1/16 [6]	1/16 [6]	1/16 [6]
Refrigerant Control	TX Valves	TX Valves	TX Valves
Indoor Coil - Fin Type	Louvered	Louvered	Louvered
Tube Type	MicroChannel	MicroChannel	MicroChannel
MicroChannel Depth in. [mm]	1.26 [32]	1.26 [32]	1.26 [32]
Face Area sq. ft. [sq. m]	7.13 [0.7]	7.13 [0.7]	7.13 [0.7]
Rows/FPI [FPcm]	1/20 [8]	1/20 [8]	1/20 [8]
Refrigerant Control	TX Valves	TX Valves	TX Valves
Drain Connection No./Size in. [mm]	1/0.75 [19.05]	1/0.75 [19.05]	1/0.75 [19.05]
Outdoor Fan - Type	Propeller	Propeller	Propeller
No. Used/Diameter in. [mm]	1/26 [660.4]	1/26 [660.4]	1/26 [660.4]
Drive Type/No. Speeds	Direct/1	Direct/1	Direct/1
CFM [L/s]	5900 [2784]	5900 [2784]	5900 [2784]
No. Motors/HP	1 at 1/2 HP	1 at 1/2 HP	1 at 1/2 HP
Motor RPM	1075	1075	1075
Indoor Fan - Type	FC Centrifugal	FC Centrifugal	FC Centrifugal
No. Used/Diameter in. [mm]	1/11x11 [279x279]	1/11x11 [279x279]	1/11x11 [279x279]
Drive Type	Direct	Direct	Direct
No. Speeds	Multiple	Multiple	Multiple
No. Motors	1	1	1
Motor HP	3/4	1-1/2	1
Motor RPM	1050	1050	1050
Motor Frame Size	48	48	48
Filter - Type	Disposable	Disposable	Disposable
Furnished	Yes	Yes	Yes
(NO.) Size Recommended in. [mm x mm x mm]	(4)2x16x16 [51x406x406]	(4)2x16x16 [51x406x406]	(4)2x16x16 [51x406x406]
Refrigerant Charge Oz. [g]	143 [4054]	143 [4054]	143 [4054]
Weights			
Net Weight lbs. [kg]	559 [244]	565 [246]	565 [246]
Ship Weight lbs. [kg]	597 [260]	603 [263]	603 [263]

See Page 17 for Notes.

[ ] Designates Metric Conversions

NOM. SIZES 3–6 TONS [10.6–21.1 kW]

Model RHPCYB Series	060ACT 060ADT 060AJT	060ACU	060ADU
Cooling Performance[A]			CONTINUED →
Nominal Cooling Capacity Btu/h [kW]	60000 [17.58]	60000 [17.58]	60000 [17.58]
EER2[B]	10.6	10.6	10.6
SEER2[B]	13.4	13.4	13.4
Nominal CFM [L/s]	2000 [944]	2000 [944]	2000 [944]
AHRI Rated CFM [L/s]	1925 [908]	1925 [908]	1925 [908]
AHRI Net Cooling Capacity Btu/h [kW]	57000 [16.71]	57000 [16.71]	57000 [16.71]
Net Sensible Capacity Btu/h [kW]	43000 [12.6]	43000 [12.6]	43000 [12.6]
Net Latent Capacity Btu/h [kW]	14000 [4.1]	14000 [4.1]	14000 [4.1]
Net System Power kW	5.4	5.4	5.4
Heating Performance (Heat Pumps)			
High Temp. Btu/h [kW] Rating	57000 [16.71]	57000 [16.71]	57000 [16.71]
System Power KW/COP	4.4/3.8	4.4/3.8	4.4/3.8
Low Temp. Btu/h [kW] Rating	26200 [7.68]	26200 [7.68]	26200 [7.68]
System Power KW/COP	3.34/2.3	3.34/2.3	3.34/2.3
HSPF2 (Btu/Watts-hr)	6.7	6.7	6.7
Compressor			
No./Type	1/Scroll	1/Scroll	1/Scroll
No./Stages	1	1	1
Outdoor Sound Rating (dB)[D]	84	84	84
Outdoor Coil - Fin Type	Louvered	Louvered	Louvered
Tube Type	MicroChannel	MicroChannel	MicroChannel
MicroChannel Depth in. [mm]	1.26 [32]	1.26 [32]	1.26 [32]
Face Area sq. ft. [sq. m]	15.52 [1.44]	15.52 [1.44]	15.52 [1.44]
Rows/FPI [FPcm]	1/16 [6]	1/16 [6]	1/16 [6]
Refrigerant Control	TX Valves	TX Valves	TX Valves
Indoor Coil - Fin Type	Louvered	Louvered	Louvered
Tube Type	MicroChannel	MicroChannel	MicroChannel
MicroChannel Depth in. [mm]	1.26 [32]	1.26 [32]	1.26 [32]
Face Area sq. ft. [sq. m]	7.13 [0.7]	7.13 [0.7]	7.13 [0.7]
Rows/FPI [FPcm]	1/20 [8]	1/20 [8]	1/20 [8]
Refrigerant Control	TX Valves	TX Valves	TX Valves
Drain Connection No./Size in. [mm]	1/0.75 [19.05]	1/0.75 [19.05]	1/0.75 [19.05]
Outdoor Fan - Type	Propeller	Propeller	Propeller
No. Used/Diameter in. [mm]	1/26 [660.4]	1/26 [660.4]	1/26 [660.4]
Drive Type/No. Speeds	Direct/1	Direct/1	Direct/1
CFM [L/s]	5900 [2784]	5900 [2784]	5900 [2784]
No. Motors/HP	1 at 1/2 HP	1 at 1/2 HP	1 at 1/2 HP
Motor RPM	1075	1075	1075
Indoor Fan - Type	FC Centrifugal	FC Centrifugal	FC Centrifugal
No. Used/Diameter in. [mm]	1/11x11 [279x279]	1/11x11 [279x279]	1/11x11 [279x279]
Drive Type	Direct	Direct	Direct
No. Speeds	Multiple	Multiple	Multiple
No. Motors	1	1	1
Motor HP	1	1-1/2	1-1/5
Motor RPM	1050	1050	1050
Motor Frame Size	48	48	48
Filter - Type	Disposable	Disposable	Disposable
Furnished	Yes	Yes	Yes
(NO.) Size Recommended in. [mm x mm x mm]	(4)2x16x16 [51x406x406]	(4)2x16x16 [51x406x406]	(4)2x16x16 [51x406x406]
Refrigerant Charge Oz. [g]	146 [4139]	146 [4139]	146 [4139]
Weights			
Net Weight lbs. [kg]	562 [245]	568 [248]	568 [248]
Ship Weight lbs. [kg]	600 [262]	606 [264]	606 [264]

See Page 17 for Notes.

[ ] Designates Metric Conversions

NOM. SIZES 3–6 TONS [10.6–21.1 kW]

Model RHPCYB Series	072ACT	072ACU	072ADT	072ADU
Cooling Performance[A]				
Nominal Cooling Capacity Btu/h [kW]	72,000 [21.10]	72,000 [21.10]	72,000 [21.10]	72,000 [21.10]
EER[B]	11	11	11	11
IEER[C]	14.1	14.1	14.1	14.1
Nominal CFM [L/s]	2400 [1133]	2400 [1133]	2400 [1133]	2400 [1133]
AHRI Rated CFM [L/s]	2360 [1114]	2360 [1114]	2360 [1114]	2360 [1114]
AHRI Net Cooling Capacity Btu/h [kW]	68500 [20.08]	68500 [20.08]	68500 [20.08]	68500 [20.08]
Net Sensible Capacity Btu/h [kW]	51500 [15.09]	51500 [15.09]	51500 [15.09]	51500 [15.09]
Net Latent Capacity Btu/h [kW]	17000 [4.98]	17000 [4.98]	17000 [4.98]	17000 [4.98]
Net System Power kW	6.18/6.18	6.18/6.18	6.18/6.18	6.18/6.18
Heating Performance (Heat Pumps)				
High Temp. Btu/h [kW] Rating	68000 [19.93]	68000 [19.93]	68000 [19.93]	68000 [19.93]
System Power KW/COP	5.86/3.4	5.86/3.4	5.86/3.4	5.86/3.4
Low Temp. Btu/h [kW] Rating	38500 [11.28]	38500 [11.28]	38500 [11.28]	38500 [11.28]
System Power KW/COP	5.01/2.25	5.01/2.25	5.01/2.25	5.01/2.25
Compressor				
No./Type	1/Scroll	1/Scroll	1/Scroll	1/Scroll
No./Stages	2	2	2	2
Outdoor Sound Rating (dB)[D]	84	84	84	84
Outdoor Coil - Fin Type	Louvered	Louvered	Louvered	Louvered
Tube Type	MicroChannel	MicroChannel	MicroChannel	MicroChannel
MicroChannel Depth in. [mm]	1.26 [32]	1.26 [32]	1.26 [32]	1.26 [32]
Face Area sq. ft. [sq. m]	15.52 [1.44]	15.52 [1.44]	15.52 [1.44]	15.52 [1.44]
Rows/FPI [FPcm]	1/16 [6]	1/16 [6]	1/16 [6]	1/16 [6]
Refrigerant Control	TX Valves	TX Valves	TX Valves	TX Valves
Indoor Coil - Fin Type	Louvered	Louvered	Louvered	Louvered
Tube Type	MicroChannel	MicroChannel	MicroChannel	MicroChannel
MicroChannel Depth in. [mm]	1.26 [32]	1.26 [32]	1.26 [32]	1.26 [32]
Face Area sq. ft. [sq. m]	7.52 [0.7]	7.52 [0.7]	7.52 [0.7]	7.52 [0.7]
Rows/FPI [FPcm]	1/20 [8]	1/20 [8]	1/20 [8]	1/20 [8]
Refrigerant Control	TX Valves	TX Valves	TX Valves	TX Valves
Drain Connection No./Size in. [mm]	1/0.75 [19.05]	1/0.75 [19.05]	1/0.75 [19.05]	1/0.75 [19.05]
Outdoor Fan - Type	Propeller	Propeller	Propeller	Propeller
No. Used/Diameter in. [mm]	1/26 [660.4]	1/26 [660.4]	1/26 [660.4]	1/26 [660.4]
Drive Type/No. Speeds	Direct/1	Direct/1	Direct/1	Direct/1
CFM [L/s]	5900 [2784]	5900 [2784]	5900 [2784]	5900 [2784]
No. Motors/HP	1 at 1/2 HP	1 at 1/2 HP	1 at 1/2 HP	1 at 1/2 HP
Motor RPM	1075	1075	1075	1075
Indoor Fan - Type	FC Centrifugal	FC Centrifugal	FC Centrifugal	FC Centrifugal
No. Used/Diameter in. [mm]	1/11x11 [279x279]	1/11x11 [279x279]	1/11x11 [279x279]	1/11x11 [279x279]
Drive Type	Direct	Direct	Direct	Direct
No. Speeds	Multiple	Multiple	Multiple	Multiple
No. Motors	1	1	1	1
Motor HP	1-1/5	1-1/5	1-1/5	1-1/5
Motor RPM	1300	1300	1300	1300
Motor Frame Size	48	48	48	48
Filter - Type	Disposable	Disposable	Disposable	Disposable
Furnished	Yes	Yes	Yes	Yes
(NO.) Size Recommended in. [mm x mm x mm]	(4)2x16x16 [51x406x406]	(4)2x16x16 [51x406x406]	(4)2x16x16 [51x406x406]	(4)2x16x16 [51x406x406]
Refrigerant Charge Oz. [g]	142 [4026]	142 [4026]	142 [4026]	142 [4026]
Weights				
Net Weight lbs. [kg]	583 [264]	583 [264]	583 [264]	583 [264]
Ship Weight lbs. [kg]	621 [282]	621 [282]	621 [282]	621 [282]

See Page 17 for Notes.

[ ] Designates Metric Conversions

NOTES:

A. Cooling Performance is rated at 95°F ambient, 80°F entering dry bulb, 67°F entering wet bulb. Gross capacity does not include the effect of fan motor heat. AHRI capacity is net and includes the effect of fan motor heat. Units are suitable for operation to 20% of nominal cfm. Units are certified in accordance with the Unitary Air Conditioner Equipment certification program, which is based on AHRI Standard 210/240.

B. EER/EER2 and/or SEER2 are rated at AHRI conditions in accordance with DOE test procedures.

C. Integrated Energy Efficiency Ratio (IEER) is rated in accordance with AHRI Standard 340/360.

D. Outdoor Sound Rating shown is tested in accordance with AHRI Standard 270.

WEIGHTED SOUND POWER LEVEL (dBA)

Unit Size – Series	Standard Rating (dBA)	TYPICAL OCTAVE BAND SPECTRUM (dBA without tone adjustment)							
		63	125	250	500	1000	2000	4000	8000
RHPCYB036	78	55.2	58.2	64.0	68.4	69.3	65.7	61.0	56.3
RHPCYB048	86	61.0	66.8	76.2	75.6	75.2	71.9	67.9	60.8
RHPCYB060	84	57.1	65.9	71.5	73.1	74.8	70.4	66.7	60.2
RHPCYB072	84	56.5	59.6	71.9	73.1	75.0	71.2	66.8	60.0

Outdoor Sound Rating shown is tested in accordance with AHRI Standard 270.

COOLING PERFORMANCE DATA—RHPCYB036

ENTERING INDOOR AIR @ 80°F [26.7°C] dbE ①											
wbE			71°F [21.7°C]			67°F [19.4°C]			63°F [17.2°C]		
CFM [L/s]			1425 [673]	1175 [555]	1025 [484]	1425 [673]	1175 [555]	1025 [484]	1425 [673]	1175 [555]	1025 [484]
DR ①			.05	.09	.12	.05	.09	.12	.05	.09	.12
OUTDOOR DRY BULB TEMPERATURE °F [°C]	75°F [23.9°C]	Total BTUH [kW]	46.7 [13.7]	45.0 [13.2]	44.0 [12.9]	44.5 [13.0]	42.8 [12.5]	41.8 [12.3]	42.2 [12.4]	40.7 [11.9]	39.7 [11.6]
		Sens BTUH [kW]	27.7 [8.1]	25.2 [7.4]	23.7 [6.9]	32.4 [9.5]	29.4 [8.6]	27.7 [8.1]	37.0 [10.8]	33.6 [9.8]	31.6 [9.3]
		Power	2.3	2.2	2.2	2.3	2.2	2.2	2.3	2.2	2.2
	80°F [26.7°C]	Total BTUH [kW]	45.5 [13.3]	43.8 [12.8]	42.8 [12.5]	43.3 [12.7]	41.7 [12.2]	40.7 [11.9]	41.0 [12.0]	39.5 [11.6]	38.6 [11.3]
		Sens BTUH [kW]	27.3 [8.0]	24.8 [7.3]	23.4 [6.9]	31.9 [9.3]	29.0 [8.5]	27.3 [8.0]	36.5 [10.7]	33.2 [9.7]	31.2 [9.1]
		Power	2.4	2.4	2.3	2.4	2.4	2.3	2.4	2.4	2.3
	85°F [29.4°C]	Total BTUH [kW]	44.3 [13.0]	42.6 [12.5]	41.7 [12.2]	42.1 [12.3]	40.5 [11.9]	39.5 [11.6]	39.8 [11.7]	38.3 [11.2]	37.4 [11.0]
		Sens BTUH [kW]	26.9 [7.9]	24.4 [7.2]	23.0 [6.7]	31.5 [9.2]	28.6 [8.4]	26.9 [7.9]	36.1 [10.6]	32.8 [9.6]	30.9 [9.1]
		Power	2.5	2.5	2.5	2.5	2.5	2.5	2.5	2.5	2.5
	90°F [32.2°C]	Total BTUH [kW]	43.1 [12.6]	41.5 [12.2]	40.5 [11.9]	40.8 [12.0]	39.3 [11.5]	38.4 [11.3]	38.6 [11.3]	37.2 [10.9]	36.3 [10.6]
		Sens BTUH [kW]	26.4 [7.7]	24.0 [7.0]	22.6 [6.6]	31.0 [9.1]	28.2 [8.3]	26.6 [7.8]	35.7 [10.5]	32.4 [9.5]	30.5 [8.9]
		Power	2.7	2.6	2.6	2.7	2.6	2.6	2.7	2.6	2.6
	95°F [35°C]	Total BTUH [kW]	41.9 [12.3]	40.3 [11.8]	39.4 [11.5]	39.6 [11.6]	38.1 [11.2]	37.3 [10.9]	37.4 [11.0]	36.0 [10.6]	35.1 [10.3]
		Sens BTUH [kW]	26.0 [7.6]	23.6 [6.9]	22.2 [6.5]	30.6 [9.0]	27.8 [8.1]	26.2 [7.7]	35.2 [10.3]	32.0 [9.4]	30.1 [8.8]
		Power	2.9	2.8	2.8	2.9	2.8	2.8	2.8	2.8	2.8
	100°F [37.8°C]	Total BTUH [kW]	40.6 [11.9]	39.1 [11.5]	38.2 [11.2]	38.4 [11.3]	37.0 [10.8]	36.1 [10.6]	36.1 [10.6]	34.8 [10.2]	34.0 [10.0]
		Sens BTUH [kW]	25.6 [7.5]	23.2 [6.8]	21.9 [6.4]	30.2 [8.9]	27.4 [8.0]	25.8 [7.6]	34.8 [10.2]	31.6 [9.3]	29.8 [8.7]
		Power	3.0	3.0	2.9	3.0	3.0	2.9	3.0	3.0	2.9
	105°F [40.6°C]	Total BTUH [kW]	39.4 [11.5]	38.0 [11.1]	37.1 [10.9]	37.2 [10.9]	35.8 [10.5]	35.0 [10.3]	34.9 [10.2]	33.6 [9.8]	32.8 [9.6]
		Sens BTUH [kW]	25.1 [7.4]	22.8 [6.7]	21.5 [6.3]	29.7 [8.7]	27.0 [7.9]	25.4 [7.4]	34.3 [10.1]	31.2 [9.1]	29.4 [8.6]
		Power	3.2	3.2	3.1	3.2	3.2	3.1	3.2	3.2	3.1
	110°F [43.3°C]	Total BTUH [kW]	38.2 [11.2]	38.2 [11.2]	35.9 [10.5]	36.0 [10.6]	34.6 [10.1]	33.8 [9.9]	33.7 [9.9]	32.5 [9.5]	31.7 [9.3]
		Sens BTUH [kW]	24.7 [7.2]	24.7 [7.2]	21.1 [6.2]	29.3 [8.6]	26.6 [7.8]	25.1 [7.4]	33.7 [9.9]	30.8 [9.0]	29.0 [8.5]
		Power	3.4	3.4	3.3	3.4	3.4	3.3	3.4	3.4	3.3
	115°F [46.1°C]	Total BTUH [kW]	37.0 [10.8]	35.6 [10.4]	34.8 [10.2]	34.7 [10.2]	33.4 [9.8]	32.7 [9.6]	32.5 [9.5]	31.3 [9.2]	30.6 [9.0]
		Sens BTUH [kW]	24.2 [7.1]	22.0 [6.4]	20.7 [6.1]	28.9 [8.5]	26.2 [7.7]	24.7 [7.2]	32.5 [9.5]	30.4 [8.9]	28.6 [8.4]
		Power	3.6	3.6	3.5	3.6	3.6	3.5	3.6	3.6	3.5
	120°F [48.9°C]	Total BTUH [kW]	35.8 [10.5]	34.4 [10.1]	33.6 [9.8]	33.5 [9.8]	32.3 [9.5]	31.5 [9.2]	31.3 [9.2]	30.1 [8.8]	29.4 [8.6]
		Sens BTUH [kW]	23.8 [7.0]	21.7 [6.4]	20.4 [6.0]	28.4 [8.3]	25.8 [7.6]	24.3 [7.1]	31.3 [9.2]	30.0 [8.8]	28.3 [8.3]
		Power	3.9	3.8	3.7	3.9	3.8	3.7	3.9	3.8	3.7
	125°F [51.7°C]	Total BTUH [kW]	34.5 [10.1]	33.3 [9.8]	32.5 [9.5]	32.3 [9.5]	31.1 [9.1]	30.4 [8.9]	30.0 [8.8]	28.9 [8.5]	28.3 [8.3]
		Sens BTUH [kW]	23.4 [6.9]	21.3 [6.2]	20.0 [5.9]	28.0 [8.2]	25.4 [7.4]	23.9 [7.0]	30.0 [8.8]	28.9 [8.5]	27.9 [8.2]
		Power	4.1	4.0	4.0	4.1	4.0	4.0	4.1	4.0	4.0

DR —Depression ratio
dbE —Entering air dry bulb
wbE—Entering air wet bulb

Total —Total capacity x 1000 BTUH
Sens —Sensible capacity x 1000 BTUH
Power —KW input

NOTES: ① When the entering air dry bulb is other than 80°F [27°C], adjust the sensible capacity from the table by adding [1.10 x CFM x (1 – DR) x (dbE – 80)].

[ ] Designates Metric Conversions

HEATING PERFORMANCE DATA—RHPCYB036

IDB			60°F [15.6°C]			70°F [21.1°C]			80°F [26.7°C]		
CFM [L/s]			1350 [637]	1175 [555]	975 [460]	1350 [637]	1175 [555]	975 [460]	1350 [637]	1175 [555]	975 [460]
OUTDOOR DRY BULB TEMPERATURE °F [°C]	0°F [-17.8°C]	Total BTUH [kW]	14.6 [4.3]	14.4 [4.2]	14.2 [4.2]	14.1 [4.1]	14.0 [4.1]	13.8 [4.0]	13.7 [4.0]	13.6 [4.0]	13.4 [3.9]
		Power	2.0	2.1	2.1	2.3	2.4	2.4	2.6	2.7	2.7
	5°F [-15.0°C]	Total BTUH [kW]	16.9 [5.0]	16.7 [4.9]	16.5 [4.8]	16.5 [4.8]	16.3 [4.8]	16.1 [4.7]	16.1 [4.7]	15.9 [4.7]	15.7 [4.6]
		Power	2.1	2.1	2.1	2.3	2.4	2.4	2.6	2.7	2.7
	10°F [-12.2°C]	Total BTUH [kW]	19.3 [5.7]	19.0 [5.6]	18.8 [5.5]	18.8 [5.5]	18.6 [5.5]	18.4 [5.4]	18.4 [5.4]	18.2 [5.3]	18.0 [5.3]
		Power	2.1	2.1	2.2	2.4	2.4	2.5	2.7	2.7	2.8
	15°F [-9.4°C]	Total BTUH [kW]	21.6 [6.3]	21.4 [6.3]	21.1v [6.2]	21.2 [6.2]	21.0 [6.2]	20.7 [6.1]	20.8 [6.1]	20.5 [6.0]	20.3 [5.9]
		Power	2.1	2.1	2.2	2.4	2.4	2.5	2.7	2.7	2.8
	20°F [-6.7°C]	Total BTUH [kW]	23.9 [7.0]	23.7 [6.9]	23.4 [6.9]	23.5 [6.9]	23.3 [6.8]	23.0 [6.7]	23.1 [6.8]	22.9 [6.7]	22.6 [6.6]
		Power	2.1	2.2	2.2	2.4	2.5	2.5	2.7	2.8	2.8
	25°F [-3.9°C]	Total BTUH [kW]	26.3 [7.7]	26.0 [7.6]	25.7 [7.5]	25.9 [7.6]	25.6 [7.5]	25.3 [7.4]	25.5 [7.5]	25.2 [7.4]	24.9 [7.3]
		Power	2.2	2.2	2.2	2.4	2.5	2.5	2.7	2.8	2.8
	30°F [-1.1°C]	Total BTUH [kW]	28.6 [8.4]	28.3 [8.3]	28.0 [8.2]	28.2 [8.3]	27.9 [8.2]	27.6 [8.1]	27.8 [8.1]	27.5 [8.1]	27.2 [8.0]
		Power	2.2	2.2	2.3	2.5	2.5	2.6	2.8	2.8	2.9
	35°F [1.7°C]	Total BTUH [kW]	31.0 [9.1]	30.7 [9.0]	30.3 [8.9]	30.6 [9.0]	30.3 [8.9]	29.9 [8.8]	30.2 [8.9]	29.8 [8.7]	29.5 [8.6]
		Power	2.2	2.2	2.3	2.5	2.5	2.6	2.8	2.8	2.9
	40°F [4.4°C]	Total BTUH [kW]	33.3 [9.8]	33.0 [9.7]	32.6 [9.6]	32.9 [9.6]	32.6 [9.6]	32.2 [9.4]	32.5 [9.5]	32.2 [9.4]	31.8 [9.3]
		Power	2.2	2.3	2.3	2.5	2.6	2.6	2.8	2.9	2.9
	45°F [7.2°C]	Total BTUH [kW]	35.7 [10.5]	35.3 [10.3]	34.9 [10.2]	35.3 [10.3]	34.9 [10.2]	34.5 [10.1]	34.9 [10.2]	34.5 [10.1]	34.1 [10.0]
		Power	2.2	2.3	2.3	2.5	2.6	2.6	2.8	2.9	2.9
	50°F [10.0°C]	Total BTUH [kW]	38.0 [11.1]	37.6 [11.0]	37.2 [10.9]	37.6 [11.0]	37.2 [10.9]	36.8 [10.8]	37.2 [10.9]	36.8 [10.8]	36.4 [10.7]
		Power	2.3	2.3	2.4	2.6	2.6	2.7	2.9	2.9	3.0

IDB—Indoor air dry bulb

[ ] Designates Metric Conversions

COOLING PERFORMANCE DATA—RHPCYB048

ENTERING INDOOR AIR @ 80°F [26.7°C] dbE ①											
wbE			71°F [21.7°C]			67°F [19.4°C]			63°F [17.2°C]		
CFM [L/s]			1900 [897]	1450 [684]	1375 [649]	1900 [897]	1450 [684]	1375 [649]	1900 [897]	1450 [684]	1375 [649]
DR ①			.05	.09	.12	.05	.09	.12	.05	.09	.12
OUTDOOR DRY BULB TEMPERATURE °F [°C]	75°F [23.9°C]	Total BTUH [kW]	63.4 [18.6]	60.0 [17.6]	59.5 [17.4]	59.2 [17.4]	56.1 [16.4]	55.6 [16.3]	55.7 [16.3]	52.7 [15.4]	52.2 [15.3]
		Sens BTUH [kW]	36.8 [10.8]	32.1 [9.4]	31.4 [9.2]	41.7 [12.2]	36.4 [10.7]	35.6 [10.4]	47.3 [13.9]	41.3 [12.1]	40.3 [11.8]
		Power	3.1	3.0	3.0	3.2	3.1	3.1	3.3	3.2	3.2
	80°F [26.7°C]	Total BTUH [kW]	62.1 [18.2]	58.8 [17.2]	58.2 [17.1]	57.9 [17.0]	54.8 [16.1]	54.3 [15.9]	54.3 [15.9]	51.4 [15.1]	50.9 [14.9]
		Sens BTUH [kW]	36.4 [10.7]	31.8 [9.3]	31.0 [9.1]	41.3 [12.1]	36.1 [10.6]	35.2 [10.3]	46.9 [13.7]	41.0 [12.0]	40.0 [11.7]
		Power	3.4	3.3	3.3	3.5	3.4	3.4	3.6	3.5	3.5
	85°F [29.4°C]	Total BTUH [kW]	60.7 [17.8]	57.4 [16.8]	56.9 [16.7]	56.5 [16.6]	53.5 [15.7]	53.0 [15.5]	52.9 [15.5]	50.1 [14.7]	49.6 [14.5]
		Sens BTUH [kW]	35.9 [10.5]	31.4 [9.2]	30.6 [9.0]	40.9 [12.0]	35.7 [10.5]	34.8 [10.2]	46.4 [13.6]	40.6 [11.9]	39.6 [11.6]
		Power	3.7	3.6	3.6	3.8	3.7	3.7	3.9	3.8	3.7
	90°F [32.2°C]	Total BTUH [kW]	59.2 [17.4]	56.1 [16.4]	55.5 [16.3]	55.0 [16.1]	52.1 [15.3]	51.6 [15.1]	51.5 [15.1]	48.7 [14.3]	48.3 [14.2]
		Sens BTUH [kW]	35.4 [10.4]	30.9 [9.1]	30.2 [8.9]	40.3 [11.8]	35.2 [10.3]	34.4 [10.1]	45.9 [13.5]	40.1 [11.8]	39.1 [11.5]
		Power	4.0	3.9	3.9	4.1	3.9	3.9	4.1	4.0	4.0
	95°F [35°C]	Total BTUH [kW]	57.7 [16.9]	54.6 [16.0]	54.1 [15.9]	53.5 [15.7]	50.7 [14.9]	50.2 [14.7]	50.0 [14.7]	47.3 [13.9]	46.8 [13.7]
		Sens BTUH [kW]	34.8 [10.2]	30.4 [8.9]	29.7 [8.7]	39.7 [11.6]	34.7 [10.2]	33.9 [9.9]	45.3 [13.3]	39.6 [11.6]	38.6 [11.3]
		Power	4.2	4.1	4.1	4.3	4.2	4.2	4.4	4.3	4.3
	100°F [37.8°C]	Total BTUH [kW]	56.1 [16.4]	53.1 [15.6]	52.6 [15.4]	51.9 [15.2]	49.2 [14.4]	48.7 [14.3]	48.4 [14.2]	45.8 [13.4]	45.4 [13.3]
		Sens BTUH [kW]	34.2 [10.0]	29.9 [8.8]	29.1 [8.5]	39.1 [11.5]	34.2 [10.0]	33.3 [9.8]	44.7 [13.1]	39.0 [11.4]	38.1 [11.2]
		Power	4.5	4.4	4.3	4.6	4.4	4.4	4.6	4.5	4.5
	105°F [40.6°C]	Total BTUH [kW]	54.5 [16.0]	51.6 [15.1]	51.1 [15.0]	50.3 [14.7]	47.6 [14.0]	47.2 [13.8]	46.7 [13.7]	44.2 [13.0]	43.8 [12.8]
		Sens BTUH [kW]	33.5 [9.8]	29.2 [8.6]	28.5 [8.4]	38.4 [11.3]	33.5 [9.8]	32.7 [9.6]	44.0 [12.9]	38.4 [11.3]	37.5 [11.0]
		Power	4.7	4.6	4.6	4.8	4.7	4.6	4.9	4.7	4.7
	110°F [43.3°C]	Total BTUH [kW]	52.8 [15.5]	50.0 [14.7]	49.5 [14.5]	48.6 [14.2]	46.0 [13.5]	45.6 [13.4]	45.0 [13.2]	42.6 [12.5]	42.2 [12.4]
		Sens BTUH [kW]	32.7 [9.6]	28.6 [8.4]	27.9 [8.2]	37.6 [11.0]	32.8 [9.6]	32.1 [9.4]	43.2 [12.7]	37.7 [11.0]	36.8 [10.8]
		Power	4.9	4.8	4.8	5.0	4.9	4.9	5.1	5.0	4.9
	115°F [46.1°C]	Total BTUH [kW]	51.0 [14.9]	48.3 [14.2]	47.9 [14.0]	46.9 [13.7]	44.4 [13.0]	43.9 [12.9]	43.3 [12.7]	41.0 [12.0]	40.6 [11.9]
		Sens BTUH [kW]	31.9 [9.3]	27.8 [8.1]	27.2 [8.0]	36.8 [10.8]	32.1 [9.4]	31.3 [9.2]	42.3 [12.4]	37.0 [10.8]	36.1 [10.6]
		Power	5.1	5.0	5.0	5.2	5.1	5.1	5.3	5.2	5.1
	120°F [48.9°C]	Total BTUH [kW]	49.2 [14.4]	46.6 [13.7]	46.2 [13.5]	45.1 [13.2]	42.6 [12.5]	42.2 [12.4]	41.5 [12.2]	39.3 [11.5]	38.9 [11.4]
		Sens BTUH [kW]	30.9 [9.1]	27.0 [7.9]	26.4 [7.7]	35.9 [10.5]	31.3 [9.2]	30.6 [9.0]	41.4 [12.1]	36.2 [10.6]	35.3 [10.3]
		Power	5.3	5.2	5.2	5.4	5.3	5.2	5.5	5.3	5.3
	125°F [51.7°C]	Total BTUH [kW]	47.4 [13.9]	44.8 [13.1]	44.4 [13.0]	43.2 [12.7]	40.9 [12.0]	40.5 [11.9]	39.6 [11.6]	37.5 [11.0]	37.1 [10.9]
		Sens BTUH [kW]	30.0 [8.8]	26.2 [7.7]	25.6 [7.5]	34.9 [10.2]	30.5 [8.9]	29.7 [8.7]	39.6 [11.6]	35.3 [10.3]	34.5 [10.1]
		Power	5.5	5.4	5.4	5.6	5.5	5.4	5.7	5.5	5.5

DR —Depression ratio
dbE —Entering air dry bulb
wbE—Entering air wet bulb

Total —Total capacity x 1000 BTUH
Sens —Sensible capacity x 1000 BTUH
Power —KW input

NOTES: ① When the entering air dry bulb is other than 80°F [27°C], adjust the sensible capacity from the table by adding [1.10 x CFM x (1 – DR) x (dbE – 80)].

[ ] Designates Metric Conversions

HEATING PERFORMANCE DATA—RHPCYB048

IDB			60°F [15.6°C]			70°F [21.1°C]			80°F [26.7°C]		
CFM [L/s]			1725 [814]	1450 [684]	1250 [590]	1725 [814]	1450 [684]	1250 [590]	1725 [814]	1450 [684]	1250 [590]
OUTDOOR DRY BULB TEMPERATURE °F [°C]	0°F [-17.8°C]	Total BTUH [kW]	21.3 [6.2]	21.0 [6.2]	20.8 [6.1]	20.1 [5.9]	19.8 [5.8]	19.6 [5.7]	18.8 [5.5]	18.6 [5.5]	18.4 [5.4]
		Power	3.0	3.1	3.1	3.4	3.5	3.5	3.7	3.8	3.9
	5°F [-15.0°C]	Total BTUH [kW]	24.1 [7.1]	23.8 [7.0]	23.6 [6.9]	22.9 [6.7]	22.6 [6.6]	22.4 [6.6]	21.6 [6.3]	21.4 [6.3]	21.1 [6.2]
		Power	3.1	3.1	3.2	3.4	3.5	3.6	3.8	3.9	3.9
	10°F [-12.2°C]	Total BTUH [kW]	26.9 [7.9]	26.6 [7.8]	26.3 [7.7]	25.7 [7.5]	25.4 [7.4]	25.1 [7.4]	24.5 [7.2]	24.1 [7.1]	23.9 [7.0]
		Power	3.1	3.2	3.2	3.5	3.5	3.6	3.8	3.9	4.0
	15°F [-9.4°C]	Total BTUH [kW]	29.7 [8.7]	29.3 [8.6]	29.1 [8.5]	28.5 [8.4]	28.1 [8.2]	27.9 [8.2]	27.3 [8.0]	26.9 [7.9]	26.6 [7.8]
		Power	3.1	3.2	3.3	3.5	3.6	3.7	3.9	4.0	4.0
	20°F [-6.7°C]	Total BTUH [kW]	32.6 [9.6]	32.1 [9.4]	31.8 [9.3]	31.3 [9.2]	30.9 [9.1]	30.6 [9.0]	30.1 [8.8]	29.7 [8.7]	29.4 [8.6]
		Power	3.2	3.3	3.3	3.6	3.6	3.7	3.9	4.0	4.1
	25°F [-3.9°C]	Total BTUH [kW]	35.4 [10.4]	34.9 [10.2]	34.6 [10.1]	34.1 [10.0]	33.7 [9.9]	33.4 [9.8]	32.9 [9.6]	32.5 [9.5]	32.1 [9.4]
		Power	3.2	3.3	3.4	3.6	3.7	3.7	4.0	4.1	4.1
	30°F [-1.1°C]	Total BTUH [kW]	38.2 [11.2]	37.7 [11.0]	37.3 [10.9]	37.0 [10.8]	36.5 [10.7]	36.1 [10.6]	35.7 [10.5]	35.2 [10.3]	34.9 [10.2]
		Power	3.3	3.4	3.4	3.6	3.7	3.8	4.0	4.1	4.2
	35°F [1.7°C]	Total BTUH [kW]	41.0 [12.0]	40.5 [11.9]	40.1 [11.8]	39.8 [11.7]	39.2 [11.5]	38.9 [11.4]	38.5 [11.3]	38.0 [11.1]	37.6 [11]
		Power	3.3	3.4	3.5	3.7	3.8	3.8	4.1	4.2	4.2
	40°F [4.4°C]	Total BTUH [kW]	43.8 [12.8]	43.2 [12.7]	42.8 [12.5]	42.6 [12.5]	42.0 [12.3]	41.6 [12.2]	41.3 [12.1]	40.8 [12.0]	40.4 [11.8]
		Power	3.4	3.5	3.5	3.7	3.8	3.9	4.1	4.2	4.3
	45°F [7.2°C]	Total BTUH [kW]	46.6 [13.7]	46.0 [13.5]	45.6 [13.4]	45.4 [13.3]	44.8 [13.1]	44.3 [13.0]	44.2 [13.0]	43.6 [12.8]	43.1 [12.6]
		Power	3.4	3.5	3.6	3.8	3.9	3.9	4.2	4.3	4.3
	50°F [10.0°C]	Total BTUH [kW]	49.4 [14.5]	48.8 [14.3]	48.3 [14.2]	48.2 [14.1]	47.6 [14.0]	47.1 [13.8]	47.0 [13.8]	46.3 [13.6]	45.9 [13.5]
		Power	3.5	3.6	3.6	3.8	3.9	4.0	4.2	4.3	4.4

IDB—Indoor air dry bulb

[ ] Designates Metric Conversions

COOLING PERFORMANCE DATA—RHPCYB060

wbE			71°F [21.7°C]			67°F [19.4°C]			63°F [17.2°C]		
CFM [L/s]			2250 [1062]	1925 [908]	1625 [767]	2250 [1062]	1925 [908]	1625 [767]	2250 [1062]	1925 [908]	1625 [767]
DR ①			.05	.09	.12	.05	.09	.12	.05	.09	.12
OUTDOOR DRY BULB TEMPERATURE °F [°C]	75°F [23.9°C]	Total BTUH [kW]	73.7 [21.6]	71.5 [21.0]	69.5 [20.4]	70.0 [20.5]	67.9 [19.9]	66.0 [19.3]	66.2 [19.4]	64.2 [18.8]	62.4 [18.3]
		Sens BTUH [kW]	42.3 [12.4]	39.2 [11.5]	36.3 [10.6]	50.7 [14.9]	47.0 [13.8]	43.6 [12.8]	59.1 [17.3]	54.8 [16.1]	50.8 [14.9]
		Power	3.8	3.8	3.7	3.9	3.8	3.8	3.9	3.8	3.7
	80°F [26.7°C]	Total BTUH [kW]	71.7 [21.0]	69.6 [20.4]	67.6 [19.8]	67.9 [19.9]	65.9 [19.3]	64.0 [18.8]	64.2 [18.8]	62.3 [18.3]	60.5 [17.7]
		Sens BTUH [kW]	41.3 [12.1]	38.2 [11.2]	35.5 [10.4]	49.7 [14.6]	46.0 [13.5]	42.7 [12.5]	58.1 [17.0]	53.8 [15.8]	49.9 [14.6]
		Power	4.1	4.1	4.0	4.1	4.1	4.0	4.1	4.1	4.0
	85°F [29.4°C]	Total BTUH [kW]	69.7 [20.4]	67.6 [19.8]	65.7 [19.3]	65.9 [19.3]	63.9 [18.7]	62.1 [18.2]	62.1 [18.2]	60.3 [17.7]	58.6 [17.2]
		Sens BTUH [kW]	40.2 [11.8]	37.3 [10.9]	34.6 [10.1]	48.6 [14.2]	45.1 [13.2]	41.8 [12.3]	57.1 [16.7]	52.9 [15.5]	49.0 [14.4]
		Power	4.4	4.3	4.3	4.4	4.4	4.3	4.4	4.3	4.3
	90°F [32.2°C]	Total BTUH [kW]	67.6 [19.8]	65.6 [19.2]	63.8 [18.7]	63.9 [18.7]	62.0 [18.2]	60.2 [17.6]	60.1 [17.6]	58.3 [17.1]	56.6 [16.6]
		Sens BTUH [kW]	39.2 [11.5]	36.3 [10.6]	33.7 [9.9]	47.6 [14.0]	44.1 [12.9]	40.9 [12.0]	56.0 [16.4]	51.9 [15.2]	48.2 [14.1]
		Power	4.7	4.6	4.5	4.7	4.6	4.6	4.7	4.6	4.6
	95°F [35°C]	Total BTUH [kW]	65.6 [19.2]	63.6 [18.6]	61.8 [18.1]	61.8 [18.1]	60.0 [17.6]	58.3 [17.1]	58.1 [17.0]	56.3 [16.5]	54.7 [16.0]
		Sens BTUH [kW]	38.2 [11.2]	35.4 [10.4]	32.8 [9.6]	46.6 [13.7]	43.2 [12.7]	40.0 [11.7]	55.0 [16.1]	51.0 [14.9]	47.3 [13.9]
		Power	5.0	4.9	4.8	5.0	4.9	4.8	5.0	4.9	4.8
	100°F [37.8°C]	Total BTUH [kW]	63.5 [18.6]	61.7 [18.1]	59.9 [17.6]	59.8 [17.5]	58.0 [17.0]	56.4 [16.5]	56.0 [16.4]	54.3 [15.9]	52.8 [15.5]
		Sens BTUH [kW]	37.1 [10.9]	34.4 [10.1]	31.9 [9.3]	45.6 [13.4]	42.2 [12.4]	39.2 [11.5]	54.0 [15.8]	50.0 [14.7]	46.4 [13.6]
		Power	5.2	5.2	5.1	5.2	5.2	5.1	5.2	5.2	5.1
	105°F [40.6°C]	Total BTUH [kW]	61.5 [18.0]	59.7 [17.5]	58.0 [1.07]	57.7 [16.9]	56.0 [16.4]	54.4 [15.9]	54.0 [15.8]	52.4 [15.4]	50.9 [14.9]
		Sens BTUH [kW]	36.1 [10.6]	33.5 [9.8]	31.0 [9.1]	44.5 [13.0]	41.3 [12.1]	38.3 [11.2]	52.9 [15.5]	49.1 [14.4]	45.5 [13.3]
		Power	5.5	5.4	5.4	5.5	5.4	5.4	5.5	5.4	5.4
	110°F [43.3°C]	Total BTUH [kW]	59.5 [17.4]	57.7 [16.9]	56.1 [16.4]	55.7 [16.3]	54.0 [15.8]	52.5 [15.4]	51.9 [15.2]	50.4 [14.8]	49.0 [14.4]
		Sens BTUH [kW]	35.1 [10.3]	32.5 [9.5]	30.2 [8.9]	43.5 [12.7]	40.3 [11.8]	37.4 [11.0]	51.9 [15.2]	48.1 [14.1]	44.6 [13.1]
		Power	5.8	5.7	5.6	5.8	5.7	5.6	5.8	5.7	5.6
	115°F [46.1°C]	Total BTUH [kW]	57.4 [16.8]	55.7 [16.3]	54.1 [15.9]	53.7 [15.7]	52.1 [15.3]	50.6 [14.8]	49.9 [14.6]	48.4 [14.2]	47.0 [13.8]
		Sens BTUH [kW]	34.1 [10.0]	31.6 [9.3]	29.3 [8.6]	42.5 [12.5]	39.4 [11.5]	36.5 [10.7]	49.9 [14.6]	47.2 [13.8]	43.7 [12.8]
		Power	6.1	6.0	5.9	6.1	6.0	5.9	6.1	6.0	5.9
	120°F [48.9°C]	Total BTUH [kW]	55.4 [16.2]	53.7 [15.7]	52.2 [15.3]	51.6 [15.1]	50.1 [14.7]	48.7 [14.3]	47.9 [14.0]	46.4 [13.6]	45.1 [13.2]
		Sens BTUH [kW]	33.0 [9.7]	30.6 [9.0]	28.4 [8.3]	41.4 [12.1]	38.4 [11.3]	35.6 [10.4]	47.9 [14.0]	46.2 [13.5]	42.9 [12.6]
		Power	6.3	6.2	6.2	6.4	6.3	6.2	6.3	6.3	6.2
	125°F [51.7°C]	Total BTUH [kW]	53.4 [15.7]	51.8 [15.2]	50.3 [14.7]	49.6 [14.5]	48.1 [14.1]	46.8 [13.7]	45.8 [13.4]	44.5 [13.0]	43.2 [12.7]
		Sens BTUH [kW]	32.0 [9.4]	29.7 [8.7]	27.5 [8.1]	40.4 [11.8]	37.5 [11.0]	34.7 [10.2]	45.8 [13.4]	44.5 [13.0]	42.0 [12.3]
		Power	6.6	6.5	6.4	6.6	6.5	6.4	6.6	6.5	6.4

DR —Depression ratio
dbE —Entering air dry bulb
wbE—Entering air wet bulb

Total —Total capacity x 1000 BTUH
Sens —Sensible capacity x 1000 BTUH
Power —KW input

NOTES: ① When the entering air dry bulb is other than 80°F [27°C], adjust the sensible capacity from the table by adding [1.10 x CFM x (1 – DR) x (dbE – 80)].

[ ] Designates Metric Conversions

HEATING PERFORMANCE DATA—RHPCYB060

IDB			60°F [15.6°C]			70°F [21.1°C]			80°F [26.7°C]		
CFM [L/s]			2000 [944]	1925 [908]	1450 [684]	2000 [944]	1925 [908]	1450 [684]	2000 [944]	1925 [908]	1450 [684]
OUTDOOR DRY BULB TEMPERATURE °F [°C]	0°F [-17.8°C]	Total BTUH [kW]	17.0 [5.0]	17.0 [5.0]	16.7 [4.9]	20.7 [6.1]	20.6 [6.0]	20.3 [5.9]	24.4 [7.2]	24.3 [7.1]	23.9 [7.0]
		Power	3.4	3.5	3.6	4.0	4.0	4.2	4.6	4.6	4.7
	5°F [-15.0°C]	Total BTUH [kW]	20.5 [6.0]	20.4 [6.0]	20.1 [5.9]	24.2 [7.1]	24.1 [7.1]	23.7 [6.9]	27.8 [8.1]	27.7 [8.1]	27.3 [8.0]
		Power	3.5	3.5	3.6	4.1	4.1	4.2	4.6	4.6	4.8
	10°F [-12.2°C]	Total BTUH [kW]	24.0 [7.0]	23.9 [7.0]	23.5 [6.9]	27.6 [8.1]	27.6 [8.1]	27.1 [7.9]	31.3 [9.2]	31.2 [9.1]	30.7 [9.0]
		Power	3.5	3.5	3.6	4.1	4.1	4.2	4.6	4.6	4.8
	15°F [-9.4°C]	Total BTUH [kW]	27.4 [8.0]	27.4 [8.0]	26.9 [7.9]	31.1 [9.1]	31.0 [9.1]	30.5 [8.9]	34.8 [10.2]	34.7 [10.2]	34.1 [10.0]
		Power	3.6	3.6	3.7	4.1	4.1	4.3	4.7	4.7	4.8
	20°F [-6.7°C]	Total BTUH [kW]	30.9 [9.1]	30.8 [9.0]	30.3 [8.9]	34.6 [10.1]	34.5 [10.1]	33.9 [9.9]	38.2 [11.2]	38.1 [11.2]	37.4 [11.0]
		Power	3.6	3.6	3.7	4.2	4.2	4.3	4.7	4.7	4.9
	25°F [-3.9°C]	Total BTUH [kW]	34.4 [10.1]	34.3 [10.1]	33.7 [9.9]	38.0 [11.1]	37.9 [11.1]	37.3 [10.9]	41.7 [12.2]	41.6 [12.2]	40.8 [12.0]
		Power	3.6	3.6	3.8	4.2	4.2	4.4	4.7	4.8	4.9
	30°F [-1.1°C]	Total BTUH [kW]	37.8 [11.1]	37.7 [11.0]	37.1 [10.9]	41.5 [12.2]	41.4 [12.1]	40.7 [11.9]	45.2 [13.2]	45.0 [13.2]	44.2 [13.0]
		Power	3.7	3.7	3.8	4.2	4.3	4.4	4.8	4.8	4.9
	35°F [1.7°C]	Total BTUH [kW]	41.3 [12.1]	41.2 [12.1]	40.5 [11.9]	45.0 [13.2]	44.8 [13.1]	44.1 [12.9]	48.6 [14.2]	48.5 [14.2]	47.6 [14.0]
		Power	3.7	3.7	3.8	4.3	4.3	4.4	4.8	4.8	5.0
	40°F [4.4°C]	Total BTUH [kW]	44.8 [13.1]	44.7 [13.1]	43.9 [12.9]	48.4 [14.2]	48.3 [14.2]	47.5 [13.9]	52.1 [15.3]	52.0 [15.2]	51.0 [14.9]
		Power	3.7	3.8	3.9	4.3	4.3	4.5	4.8	4.9	5.0
	45°F [7.2°C]	Total BTUH [kW]	48.2 [14.1]	48.1 [14.1]	47.3 [13.9]	51.9 [15.2]	51.8 [15.2]	50.9 [14.9]	55.6 [16.3]	55.4 [16.2]	54.4 [15.9]
		Power	3.8	3.8	3.9	4.3	4.4	4.5	4.9	4.9	5.1
	50°F [10.0°C]	Total BTUH [kW]	51.7 [15.2]	51.6 [15.1]	50.7 [14.9]	55.4 [16.2]	55.2 [16.2]	54.2 [15.9]	59.0 [17.3]	58.9 [17.3]	57.8 [16.9]
		Power	3.8	3.8	4.0	4.4	4.4	4.5	4.9	4.9	5.1

IDB—Indoor air dry bulb

[ ] Designates Metric Conversions

COOLING PERFORMANCE DATA—RHPCYB072

ENTERING INDOOR AIR @ 80°F [26.7°C] dbE ①											
wbE			71°F [21.7°C]			67°F [19.4°C]			63°F [17.2°C]		
CFM [L/s]			2850 [1345]	2350 [1109]	2050 [967]	2850 [1345]	2350 [1109]	2050 [967]	2850 [1345]	2350 [1109]	2050 [967]
DR ①			.05	.09	.12	.05	.09	.12	.05	.09	.12
OUTDOOR DRY BULB TEMPERATURE °F [°C]	75°F [23.9°C]	Total BTUH [kW]	81.9 [24.0]	78.9 [23.1]	77.1 [22.6]	78.7 [23.1]	75.7 [22.2]	74.0 [21.7]	75.4 [22.1]	72.6 [21.3]	70.9 [20.8]
		Sens BTUH [kW]	48.0 [14.1]	43.6 [12.8]	41.0 [12.0]	57.9 [17.0]	52.7 [15.4]	49.5 [14.5]	62.7 [18.4]	57.0 [16.7]	53.6 [15.7]
		Power	4.3	4.3	4.2	4.2	4.1	4.1	4.3	4.2	4.2
	80°F [26.7°C]	Total BTUH [kW]	82.3 [24.1]	79.2 [23.2]	77.4 [22.7]	79.0 [23.2]	76.1 [22.3]	74.3 [21.8]	75.8 [22.2]	73.0 [21.4]	71.3 [20.9]
		Sens BTUH [kW]	48.8 [14.3]	44.4 [13.0]	41.8 [12.3]	58.8 [17.2]	53.5 [15.7]	50.3 [14.7]	63.6 [18.6]	57.8 [16.9]	54.4 [15.9]
		Power	4.7	4.6	4.6	4.6	4.5	4.4	4.7	4.6	4.5
	85°F [29.4°C]	Total BTUH [kW]	82.5 [24.2]	79.4 [23.3]	77.6 [22.7]	79.2 [23.2]	76.3 [22.4]	74.5 [21.8]	76.0 [22.3]	73.2 [21.5]	71.5 [21.0]
		Sens BTUH [kW]	49.5 [14.5]	45.1 [13.2]	42.4 [12.4]	59.5 [17.4]	54.1 [15.9]	50.9 [14.9]	64.3 [18.8]	58.5 [17.1]	55.0 [16.1]
		Power	5.1	5.0	5.0	5.0	4.9	4.8	5.1	5.0	4.9
	90°F [32.2°C]	Total BTUH [kW]	82.5 [24.2]	79.4 [23.3]	77.6 [22.7]	79.2 [23.2]	76.3 [22.4]	74.5 [21.8]	76.0 [22.3]	73.2 [21.5]	71.5 [21.0]
		Sens BTUH [kW]	50.1 [14.7]	45.5 [13.3]	42.8 [12.5]	60.0 [17.6]	54.6 [16.0]	51.3 [15.0]	64.8 [19.0]	58.9 [17.3]	55.4 [16.2]
		Power	5.5	5.4	5.3	5.3	5.2	5.2	5.4	5.3	5.3
	95°F [35°C]	Total BTUH [kW]	82.3 [24.1]	79.3 [23.2]	77.4 [22.7]	79.1 [23.2]	76.1 [22.3]	74.3 [21.8]	75.8 [22.2]	73.0 [21.4]	71.3 [20.9]
		Sens BTUH [kW]	50.4 [14.8]	45.8 [13.4]	43.1 [12.6]	60.3 [17.7]	54.9 [16.1]	51.6 [15.1]	65.1 [19.1]	59.2 [17.4]	55.7 [16.3]
		Power	5.9	5.8	5.7	5.7	5.6	5.6	5.8	5.7	5.7
	100°F [37.8°C]	Total BTUH [kW]	82.0 [24.0]	78.9 [23.1]	77.1 [22.6]	78.7 [23.1]	75.8 [22.2]	74.0 [21.7]	75.5 [22.1]	72.7 [21.3]	71.0 [20.8]
		Sens BTUH [kW]	50.5 [14.8]	46.0 [13.5]	43.2 [12.7]	60.5 [17.7]	55.0 [16.1]	51.7 [15.2]	65.3 [19.1]	59.4 [17.4]	55.8 [16.4]
		Power	6.3	6.1	6.1	6.1	6.0	5.9	6.2	6.1	6.0
	105°F [40.6°C]	Total BTUH [kW]	81.5 [23.9]	78.4 [23.0]	76.6 [22.5]	78.2 [22.9]	75.3 [22.1]	73.5 [21.5]	75.0 [22.0]	72.2 [21.2]	70.5 [20.7]
		Sens BTUH [kW]	50.5 [14.8]	46.0 [13.5]	43.2 [12.7]	60.4 [17.7]	55.0 [16.1]	51.7 [15.2]	65.2 [19.1]	59.3 [17.4]	55.8 [16.4]
		Power	6.6	6.5	6.4	6.5	6.4	6.3	6.6	6.5	6.4
	110°F [43.3°C]	Total BTUH [kW]	80.8 [23.7]	77.7 [22.8]	75.9 [22.2]	77.5 [22.7]	74.6 [21.9]	72.9 [21.4]	74.3 [21.8]	71.5 [21.0]	69.8 [20.5]
		Sens BTUH [kW]	50.3 [14.7]	45.8 [13.4]	43.0 [12.6]	60.2 [17.6]	54.8 [16.1]	51.5 [15.1]	65.0 [19.1]	59.1 [17.3]	55.6 [16.3]
		Power	7.0	6.9	6.8	6.9	6.7	6.7	7.0	6.8	6.8
	115°F [46.1°C]	Total BTUH [kW]	79.9 [23.4]	76.9 [22.5]	75.1 [22.0]	76.6 [22.5]	73.7 [21.6]	72.0 [21.1]	73.4 [21.5]	70.6 [20.7]	69.0 [20.2]
		Sens BTUH [kW]	49.9 [14.6]	45.4 [13.3]	42.7 [12.5]	59.8 [17.5]	54.4 [15.9]	51.2 [15.0]	64.6 [18.9]	58.8 [17.2]	55.3 [16.2]
		Power	7.4	7.3	7.2	7.2	7.1	7.0	7.3	7.2	7.1
	120°F [48.9°C]	Total BTUH [kW]	78.8 [23.1]	75.9 [22.2]	74.1 [21.7]	75.5 [22.1]	72.7 [21.3]	71.0 [20.8]	72.3 [21.2]	69.6 [20.4]	68.0 [19.9]
		Sens BTUH [kW]	49.3 [14.4]	44.8 [13.1]	42.2 [12.4]	59.2 [17.4]	53.9 [15.8]	50.7 [14.9]	64.0 [18.8]	58.2 [17.1]	54.8 [16.1]
		Power	7.8	7.6	7.6	7.6	7.5	7.4	7.7	7.6	7.5
	125°F [51.7°C]	Total BTUH [kW]	77.6 [22.7]	74.7 [21.9]	73.0 [21.4]	74.3 [21.8]	71.5 [21.0]	69.9 [20.5]	71.1 [20.8]	68.4 [20.0]	66.8 [19.6]
		Sens BTUH [kW]	48.5 [14.2]	44.1 [12.9]	41.5 [12.2]	58.5 [17.1]	53.2 [15.6]	50.0 [14.7]	63.2 [18.5]	57.5 [16.9]	54.1 [15.9]
		Power	8.2	8.0	7.9	8.0	7.9	7.8	8.1	8.0	7.9

DR —Depression ratio
dbE —Entering air dry bulb
wbE—Entering air wet bulb

Total —Total capacity x 1000 BTUH
Sens —Sensible capacity x 1000 BTUH
Power —KW input

NOTES: ① When the entering air dry bulb is other than 80°F [27°C], adjust the sensible capacity from the table by adding [1.10 x CFM x (1 – DR) x (dbE – 80)].

[ ] Designates Metric Conversions

HEATING PERFORMANCE DATA—RHPCYB072

IDB			60°F [15.6°C]			70°F [21.1°C]			80°F [26.7°C]		
CFM [L/s]			2700 [1274]	2350 [1109]	1950 [920]	2700 [1274]	2350 [1109]	1950 [920]	2700 [1274]	2350 [1109]	1950 [920]
OUTDOOR DRY BULB TEMPERATURE °F [°C]	0°F [-17.8°C]	Total BTUH [kW]	34.9 [10.2]	34.6 [10.1]	34.2 [10.0]	27.5 [8.1]	27.2 [8.0]	26.9 [7.9]	20.1 [5.9]	19.9 [5.8]	19.7 [5.8]
		Power	3.9	4.0	4.1	4.3	4.4	4.5	4.6	4.7	4.8
	5°F [-15.0°C]	Total BTUH [kW]	39.7 [11.6]	39.3 [11.5]	38.8 [11.4]	32.3 [9.5]	32.0 [9.4]	31.6 [9.3]	24.9 [7.3]	24.7 [7.2]	24.4 [7.2]
		Power	4.0	4.1	4.2	4.4	4.4	4.5	4.7	4.8	4.9
	10°F [-12.2°C]	Total BTUH [kW]	44.5 [13.0]	44.0 [12.9]	43.5 [12.7]	37.1 [10.9]	36.7 [10.8]	36.3 [10.6]	29.7 [8.7]	29.4 [8.6]	29.0 [8.5]
		Power	4.1	4.2	4.3	4.4	4.5	4.6	4.8	4.9	5.0
	15°F [-9.4°C]	Total BTUH [kW]	49.3 [14.4]	48.8 [14.3]	48.2 [14.1]	41.9 [12.3]	41.4 [12.1]	40.9 [12.0]	34.5 [10.1]	34.1 [10.0]	33.7 [9.9]
		Power	4.2	4.3	4.3	4.5	4.6	4.7	4.9	5.0	5.1
	20°F [-6.7°C]	Total BTUH [kW]	54.1 [15.9]	53.5 [15.7]	52.9 [15.5]	46.7 [13.7]	46.2 [13.5]	45.6 [13.4]	39.3 [11.5]	38.9 [11.4]	38.4 [11.3]
		Power	4.3	4.3	4.4	4.6	4.7	4.8	5.0	5.1	5.2
	25°F [-3.9°C]	Total BTUH [kW]	58.9 [17.3]	58.2 [17.1]	57.5 [16.9]	51.5 [15.1]	50.9 [14.9]	50.3 [14.7]	44.0 [12.9]	43.6 [12.8]	43.1 [12.6]
		Power	4.3	4.4	4.5	4.7	4.8	4.9	5.1	5.2	5.3
	30°F [-1.1°C]	Total BTUH [kW]	63.6 [18.6]	63.0 [18.5]	62.2 [18.2]	56.2 [16.5]	55.6 [16.3]	55.0 [16.1]	48.8 [14.3]	48.3 [14.2]	47.7 [14.0]
		Power	4.4	4.5	4.6	4.8	4.9	5.0	5.1	5.2	5.4
	35°F [1.7°C]	Total BTUH [kW]	68.4 [20.0]	67.7 [19.8]	66.9 [19.6]	61.0 [17.9]	60.4 [17.7]	59.6 [17.5]	53.6 [15.7]	53.1 [15.6]	52.4 [15.4]
		Power	4.5	4.6	4.7	4.9	5.0	5.1	5.2	5.3	5.4
	40°F [4.4°C]	Total BTUH [kW]	73.2 [21.5]	72.4 [21.2]	71.6 [21.0]	65.8 [19.3]	65.1 [19.1]	64.3 [18.8]	58.4 [17.1]	57.8 [16.9]	57.1 [16.7]
		Power	4.6	4.7	4.8	5.0	5.1	5.2	5.3	5.4	5.5
	45°F [7.2°C]	Total BTUH [kW]	78.0 [22.9]	77.2 [22.6]	76.2 [22.3]	70.6 [20.7]	69.8 [20.5]	69.0 [20.2]	63.2 [18.5]	62.5 [18.3]	61.8 [18.1]
		Power	4.7	4.8	4.9	5.0	5.1	5.2	5.4	5.5	5.6
	50°F [10.0°C]	Total BTUH [kW]	82.8 [24.3]	81.9 [24.0]	80.9 [23.7]	75.4 [22.1]	74.6 [21.9]	73.7 [21.6]	68.0 [19.9]	67.2 [19.7]	66.4 [19.5]
		Power	4.8	4.9	5.0	5.1	5.2	5.3	5.5	5.6	5.7

IDB—Indoor air dry bulb

[ ] Designates Metric Conversions

3–6T—LOW STATIC—SIDEFLOW (203/230V)

Unit Model (Tonnage)	Manufacturer Recommended Airflow Range (Min/Max) CFM	Motor HP [W]	Motor Speed	CFM/ WATTS	External Static Pressure - Inches W.C. [kPa]							
					0.1 [.02]	0.2 [.05]	0.3 [.07]	0.4 [.10]	0.5 [.12]	0.6 [.15]	0.7 [.17]	0.8 [.20]
RHPCYB036 (3T)	1050/1350	3/4 HP [559]	Fan - Tap 1	CFM	1444	1204	909	823	732	622	514	448
				WATTS	190	158	124	127	134	143	149	155
		3/4 HP [559]	Tap 2	CFM	1592	1512	1441	1386	1315	1257	1198	1140
				WATTS	238	253	266	276	289	300	311	324
		3/4 HP [559]	Tap 3	CFM	1827	1757	1687	1622	1571	1517	1447	1393
				WATTS	335	351	368	380	394	405	421	435
		3/4 HP [559]	Cooling - Tap 4 *	CFM	1492	1414	1342	1283	1212	1147	1079	1023
				WATTS	208	220	231	241	252	263	274	284
		3/4 HP [559]	High Speed - Tap 5	CFM	1737	1663	1585	1531	1478	1415	1354	1301
				WATTS	293	309	324	336	348	362	375	386
RHPCYB048 (4T)	1400/1800	3/4 HP [559]	Fan - Tap 1	CFM	1409	1170	969	891	828	740	668	602
				WATTS	177	145	129	137	144	154	160	168
		3/4 HP [559]	Tap 2	CFM	1858	1803	1741	1676	1622	1572	1516	1456
				WATTS	348	363	379	392	404	417	432	445
		3/4 HP [559]	Tap 3	CFM	1935	1870	1810	1752	1695	1645	1587	1540
				WATTS	381	400	413	430	443	455	471	484
		3/4 HP [559]	Cooling - Tap 4 *	CFM	1759	1686	1627	1575	1530	1482	1418	1366
				WATTS	321	337	350	362	375	387	401	412
		3/4 HP [559]	High Speed - Tap 5	CFM	2113	2059	2007	1948	1893	1844	1793	1748
				WATTS	491	507	524	541	557	570	586	600
RHPCYB060 (5T)	1750/2250	1 HP [745]	Fan - Tap 1	CFM	1186	1107	1015	953	881	809	714	636
				WATTS	122	131	141	148	157	164	174	180
		1 HP [745]	Tap 2	CFM	1719	1665	1597	1541	1482	1425	1360	1301
				WATTS	292	304	319	331	344	355	369	382
		1 HP [745]	Tap 3	CFM	1944	1897	1827	1769	1717	1661	1609	1552
				WATTS	394	409	425	440	452	467	483	495
		1 HP [745]	Cooling - Tap 4 *	CFM	2218	2161	2110	2060	2015	1969	1924	1877
				WATTS	584	606	623	638	654	672	684	699
		1 HP [745]	High Speed - Tap 5	CFM	2365	2291	2241	2204	2161	2111	2065	2026
				WATTS	694	723	741	757	773	794	810	825
RHPCYB072 (6T)	2100/2700	1.2 HP [895]	Fan/Low Heat - Tap 1	CFM	1384	1319	1249	1188	1127	1066	1006	947
				WATTS	192	204	215	225	240	245	255	265
		1.2 HP [895]	High Heat - Tap 2	CFM	1874	1833	1778	1730	1680	1630	1584	1539
				WATTS	421	435	450	466	480	495	510	525
		1.2 HP [895]	Low Cool - Tap 3	CFM	1546	1488	1427	1372	1316	1261	1203	1149
				WATTS	258	270	282	298	310	318	330	338
		1.2 HP [895]	High Cool - Tap 4	CFM	2456	2415	2336	2279	2280	2181	2158	2062
				WATTS	738	755	794	808	827	847	877	904
		1.2 HP [895]	High Speed - Tap 5	CFM	2363	2330	2280	2237	2198	2164	2110	2071
				WATTS	771	792	808	824	843	860	875	890

NOTES: *Tap 4 - Factory Cooling Tap
Pressure drops across the 3-5T CFM range (1050 - 2250)
Wet coil: ~0.09 Inches W.C.
Downflow: ~0.1 Inches W.C.
Reheat coil: ~0.09 Inches W.C.

[ ] Designates Metric Conversions

3–6T—HIGH STATIC—SIDEFLOW (203/230V)

Unit Model (Tonnage)	Manufacturer Recommended Airflow Range (Min/Max) CFM	Motor HP [W]	Motor Speed	CFM/ WATTS	External Static Pressure - Inches W.C. [kPa]							
					0.8 [.2]	0.9 [.22]	1.0 [.25]	1.1 [.27]	1.2 [.3]	1.3 [.32]	1.4 [.35]	1.5 [.37]
RHPCYB036 (3T)	1050/1350	1.5 HP [1119]	Fan - Tap 1	CFM	636	561	490	419	366	305	247	175
				WATTS	224	231	237	243	249	256	261	268
		1.5 HP [1119]	Tap 2	CFM	1103	1044	981	920	860	797	738	682
				WATTS	371	382	392	403	412	420	428	437
		1.5 HP [1119]	Tap 3	CFM	1304	1247	1195	1140	1082	1020	965	908
				WATTS	463	476	487	497	510	521	533	540
		1.5 HP [1119]	Cooling - Tap 4 *	CFM	688	614	543	466	411	349	295	218
				WATTS	237	244	250	256	263	270	275	282
		1.5 HP [1119]	High Speed - Tap 5	CFM	1091	1032	967	906	846	784	724	669
				WATTS	366	377	387	397	406	415	423	431
RHPCYB048 (4T)	1400/1800	1.5 HP [1119]	Fan - Tap 1	CFM	1088	1026	956	888	828	770	711	657
				WATTS	363	371	383	394	404	415	423	430
		1.5 HP [1119]	Tap 2	CFM	1378	1328	1281	1231	1178	1124	1069	1010
				WATTS	504	516	527	540	550	563	578	594
		1.5 HP [1119]	Tap 3	CFM	1437	1384	1336	1286	1232	1184	1130	1069
				WATTS	534	547	559	572	584	595	611	624
		1.5 HP [1119]	Cooling - Tap 4 *	CFM	1022	955	880	813	754	694	633	580
				WATTS	338	345	357	367	376	385	394	401
		1.5 HP [1119]	High Speed - Tap 5	CFM	1490	1438	1389	1339	1287	1242	1190	1133
				WATTS	564	578	592	604	617	628	643	655
RHPCYB060 (5T)	1750/2250	1.5 HP [1119]	Fan - Tap 1	CFM	1227	1168	1107	1054	992	930	855	792
				WATTS	422	431	447	453	469	477	484	500
		1.5 HP [1119]	Tap 2	CFM	1227	1168	1107	1054	992	930	855	792
				WATTS	422	431	447	453	469	477	484	500
		1.5 HP [1119]	Tap 3	CFM	1545	1502	1463	1417	1370	1319	1266	1212
				WATTS	604	618	633	648	658	672	686	702
		1.5 HP [1119]	Cooling - Tap 4 *	CFM	1456	1416	1371	1321	1267	1215	1161	1113
				WATTS	547	561	575	589	601	613	626	639
		1.5 HP [1119]	High Speed - Tap 5	CFM	1686	1642	1605	1564	1523	1479	1428	1380
				WATTS	707	721	736	750	765	781	795	807
RHPCYB072 (6T)	2100/2700	1.2 HP [895]	Fan/Low Heat - Tap 1	CFM	1237	1182	1137	1076	996	961	906	853
				WATTS	364	373	386	396	405	409	421	431
		1.2 HP [895]	High Heat - Tap 2	CFM	2043	2004	1953	1917	1879	1828	1783	1750
				WATTS	834	850	861	876	891	906	925	938
		1.2 HP [895]	Low Cool - Tap 3	CFM	1149	1082	1030	969	891	837	781	728
				WATTS	338	345	357	365	374	383	393	403
		1.2 HP [895]	High Cool - Tap 4	CFM	2062	2026	2004	1945	1907	1873	1836	1804
				WATTS	904	926	946	967	1008	1030	1057	1082
		1.2 HP [895]	High Speed - Tap 5	CFM	2462	2416	2371	2337	2294	2251	2214	2165
				WATTS	1053	1063	1078	1085	1100	1113	1121	1135

NOTES: *Tap 4 - Factory Cooling Tap
Pressure drops across the 3-5T CFM range (1050 - 2250)
Wet coil: ~0.09 Inches W.C.
Downflow: ~0.1 Inches W.C.
Reheat coil: ~0.09 Inches W.C.

[ ] Designates Metric Conversions

3–6T—LOW STATIC—SIDEFLOW (460V)

Unit Model (Tonnage)	Manufacturer Recommended Airflow Range (Min/Max) CFM	Motor HP [W]	Motor Speed	CFM/ WATTS	External Static Pressure - Inches W.C. [kPa]							
					0.1 [.02]	0.2 [.05]	0.3 [.07]	0.4 [.10]	0.5 [.12]	0.6 [.15]	0.7 [.17]	0.8 [.20]
RHPCYB036 (3T)	1050/1350	3/4 HP [559]	Fan - Tap 1	CFM	957	867	777	686	562	477	388	313
				WATTS	94	102	110	117	125	130	135	140
		3/4 HP [559]	Tap 2	CFM	1172	1095	1019	942	865	789	696	621
				WATTS	145	155	164	174	182	190	199	206
		3/4 HP [559]	Tap 3	CFM	1697	1641	1586	1530	1473	1413	1364	1314
				WATTS	365	378	390	404	418	432	444	457
		3/4 HP [559]	Cooling - Tap 4 *	CFM	1472	1393	1331	1265	1181	1123	1065	1007
				WATTS	195	208	219	231	243	253	264	273
		3/4 HP [559]	High Speed - Tap 5	CFM	1612	1551	1493	1435	1373	1316	1261	1205
				WATTS	316	329	341	353	367	379	392	404
RHPCYB048 (4T)	1400/1800	3/4 HP [559]	Fan - Tap 1	CFM	1061	965	882	801	707	545	445	359
				WATTS	114	124	132	140	148	154	160	166
		3/4 HP [559]	Tap 2	CFM	1319	1247	1172	1105	1039	962	884	807
				WATTS	189	200	211	221	231	242	250	259
		3/4 HP [559]	Tap 3	CFM	1737	1684	1624	1564	1509	1453	1400	1345
				WATTS	374	391	404	417	430	445	458	471
		3/4 HP [559]	Cooling - Tap 4 *	CFM	1644	1579	1518	1456	1392	1335	1278	1222
				WATTS	321	335	348	360	373	386	398	411
		3/4 HP [559]	High Speed - Tap 5	CFM	1923	1862	1813	1763	1711	1657	1610	1556
				WATTS	485	500	514	532	545	563	576	594
RHPCYB060 (5T)	1750/2250	1 HP [745]	Fan - Tap 1	CFM	1107	1017	936	865	793	711	592	527
				WATTS	126	135	143	151	158	166	174	181
		1 HP [745]	Tap 2	CFM	1244	1171	1103	1024	956	893	825	747
				WATTS	168	177	186	195	203	212	221	230
		1 HP [745]	Tap 3	CFM	1827	1770	1718	1664	1607	1556	1497	1455
				WATTS	428	442	455	469	482	494	506	518
		1 HP [745]	Cooling - Tap 4 *	CFM	2078	2041	1991	1925	1867	1827	1780	1731
				WATTS	606	620	635	651	667	680	695	709
		1 HP [745]	High Speed - Tap 5	CFM	2192	2151	2105	2056	2005	1961	1923	1874
				WATTS	720	737	752	767	784	801	815	830
RHPCYB072 (6T)	2100/2700	1.2 HP [895]	Fan/Low Heat - Tap 1	CFM	1384	1319	1249	1188	1127	1066	1006	947
				WATTS	192	204	215	225	240	245	255	265
		1.2 HP [895]	High Heat - Tap 2	CFM	1863	1821	1765	1717	1650	1617	1571	1526
				WATTS	413	428	442	459	474	488	503	518
		1.2 HP [895]	Low Cool - Tap 3	CFM	1546	1488	1427	1372	1316	1261	1203	1149
				WATTS	258	270	282	298	310	318	330	338
		1.2 HP [895]	High Cool - Tap 4	CFM	2368	2304	2267	2191	2126	2042	2033	1921
				WATTS	677	701	710	729	752	770	785	806
		1.2 HP [895]	High Speed - Tap 5	CFM	2363	2330	2280	2237	2198	2164	2110	2071
				WATTS	771	792	808	824	843	860	875	890

NOTES: *Tap 4 - Factory Cooling Tap
Pressure drops across the 3-5T CFM range (1050 - 2250)
Wet coil: ~0.09 Inches W.C.
Downflow: ~0.1 Inches W.C.
Reheat coil: ~0.09 Inches W.C.

[ ] Designates Metric Conversions

3–6T—HIGH STATIC—SIDEFLOW (460V)

Unit Model (Tonnage)	Manufacturer Recommended Airflow Range (Min/Max) CFM	Motor HP [W]	Motor Speed	CFM/ WATTS	External Static Pressure - Inches W.C. [kPa]							
					0.8 [.2]	0.9 [.22]	1.0 [.25]	1.1 [.27]	1.2 [.3]	1.3 [.32]	1.4 [.35]	1.5 [.37]
RHPCYB036 (3T)	1050/1350	1 HP [745]	Fan - Tap 1	CFM	729	644	554	499	438	386	329	278
				WATTS	226	233	240	245	252	257	262	267
		1 HP [745]	Tap 2	CFM	729	644	554	499	438	386	329	278
				WATTS	226	233	240	245	252	257	262	267
		1 HP [745]	Tap 3	CFM	1465	1421	1372	1320	1272	1226	1176	1122
				WATTS	535	547	559	571	583	593	603	615
		1 HP [745]	Cooling - Tap 4 *	CFM	930	860	783	718	643	586	530	476
				WATTS	286	294	304	311	319	326	333	339
		1 HP [745]	High Speed - Tap 5	CFM	1345	1292	1239	1184	1135	1082	1016	947
				WATTS	460	472	483	493	503	513	525	537
RHPCYB048 (4T)	1400/1800	1 HP [745]	Fan - Tap 1	CFM	871	794	722	654	580	526	466	413
				WATTS	267	275	283	290	297	303	310	315
		1 HP [745]	Tap 2	CFM	1344	1292	1239	1192	1138	1084	1007	953
				WATTS	458	470	481	490	500	510	525	534
		1 HP [745]	Tap 3	CFM	1514	1464	1415	1374	1323	1275	1228	1184
				WATTS	561	576	589	600	611	622	633	645
		1 HP [745]	Cooling - Tap 4 *	CFM	1235	1182	1132	1079	1019	950	886	828
				WATTS	407	418	427	437	448	459	469	478
		1 HP [745]	High Speed - Tap 5	CFM	1589	1545	1497	1463	1413	1367	1317	1275
				WATTS	618	633	647	660	672	683	695	705
RHPCYB060 (5T)	1750/2250	1.2 HP [895]	Fan - Tap 1	CFM	1091	1034	983	924	865	790	724	666
				WATTS	343	353	359	371	380	387	396	404
		1.2 HP [895]	Tap 2	CFM	1091	1034	983	924	865	790	724	666
				WATTS	343	353	359	371	380	387	396	404
		1.2 HP [895]	Tap 3	CFM	1841	1794	1748	1703	1657	1615	1578	1538
				WATTS	794	809	826	836	847	859	870	878
		1.2 HP [895]	Cooling - Tap 4 *	CFM	1762	1714	1669	1624	1580	1538	1496	1459
				WATTS	736	749	763	774	786	797	807	816
		1.2 HP [895]	High Speed - Tap 5	CFM	2046	2004	1970	1921	1880	1835	1801	1753
				WATTS	980	997	1003	1025	1045	1059	1072	1090
RHPCYB072 (6T)	2100/2700	1.2 HP [895]	Fan/Low Heat - Tap 1	CFM	1237	1182	1137	1076	996	961	906	853
				WATTS	364	373	386	396	405	409	421	431
		1.2 HP [895]	High Heat - Tap 2	CFM	2043	2004	1953	1917	1879	1828	1783	1750
				WATTS	834	850	861	876	891	906	925	938
		1.2 HP [895]	Low Cool - Tap 3	CFM	1149	1082	1030	969	891	837	781	728
				WATTS	338	345	357	365	374	383	393	403
		1.2 HP [895]	High Cool - Tap 4	CFM	1921	1873	1780	1709	1739	1626	1598	1593
				WATTS	806	809	827	853	864	882	886	896
		1.2 HP [895]	High Speed - Tap 5	CFM	2462	2416	2371	2337	2294	2251	2214	2165
				WATTS	1053	1063	1078	1085	1100	1113	1121	1135

NOTES: *Tap 4 - Factory Cooling Tap
Pressure drops across the 3-5T CFM range (1050 - 2250)
Wet coil: ~0.09 Inches W.C.
Downflow: ~0.1 Inches W.C.
Reheat coil: ~0.09 Inches W.C.

[ ] Designates Metric Conversions

ELECTRICAL DATA – RHPCYB SERIES WITHOUT POWERED EXHAUST

		036ACT	036ACU	036ADT	036ADU	036AJT
Unit Information	Unit Operating Voltage Range	187-253	187-253	414-506	414-506	187-253
	Volts	208/230	208/230	460	460	208/230
	Phase	3	3	3	3	1
	Hz	60	60	60	60	60
	Minimum Circuit Ampacity	23	28	11	12	29
	Minimum Overcurrent Protection Device Size	30	35	15	15	35
	Maximum Overcurrent Protection Device Size	30	40	15	15	40
Compressor Motor	No.	1	1	1	1	1
	Volts	208/230	208/230	460	460	208/230
	Phase	3	3	3	3	1
	Amps (RLA), Comp. 1	12.2	12.2	5.8	5.8	16.7
	Amps (LRA), Comp. 1	97.5	97.5	44.3	44.3	93.5
Condenser Motor	No.	1	1	1	1	1
	Volts	208/230	208/230	460	460	208/230
	Phase	1	1	1	1	1
	HP	1/5	1/5	1/5	1/5	1/5
	Amps (FLA, each)	1.2	1.2	0.8	0.8	1.2
	Amps (LRA, each)	2.3	2.3	1.4	1.4	2.3
Evaporator Fan	No.	1	1	1	1	1
	Volts	208/230	208/230	460	460	208/230
	Phase	1	1	1	1	1
	HP	3/4	1-1/2	3/4	1	3/4
	Amps (FLA, each)	6	11.5	2.7	3.5	6
	Amps (LRA, each)	N/A	N/A	N/A	N/A	N/A

ELECTRICAL DATA – RHPCYB SERIES WITH POWERED EXHAUST

		036ACT	036ACU	036ADT	036ADU	036AJT
Unit Information	Unit Operating Voltage Range	187-253	187-253	414-506	414-506	187-253
	Volts	208/230	208/230	460	460	208/230
	Phase	3	3	3	3	1
	Hz	60	60	60	60	60
	Minimum Circuit Ampacity	26	32	13	14	32
	Minimum Overcurrent Protection Device Size	30	35	15	20	40
	Maximum Overcurrent Protection Device Size	35	40	15	20	45
Compressor Motor	No.	1	1	1	1	1
	Volts	208/230	208/230	460	460	208/230
	Phase	3	3	3	3	1
	Amps (RLA), Comp. 1	12.2	12.2	5.8	5.8	16.7
	Amps (LRA), Comp. 1	97.5	97.5	44.3	44.3	93.5
Condenser Motor	No.	1	1	1	1	1
	Volts	208/230	208/230	460	460	208/230
	Phase	1	1	1	1	1
	HP	1/5	1/5	1/5	1/5	1/5
	Amps (FLA, each)	1.2	1.2	0.8	0.8	1.2
	Amps (LRA, each)	2.3	2.3	1.4	1.4	2.3
Evaporator Fan	No.	1	1	1	1	1
	Volts	208/230	208/230	460	460	208/230
	Phase	1	1	1	1	1
	HP	3/4	1-1/2	3/4	1	3/4
	Amps (FLA, each)	6	11.5	2.7	3.5	6
	Amps (LRA, each)	N/A	N/A	N/A	N/A	N/A

ELECTRICAL DATA – RHPCYB SERIES WITHOUT POWERED EXHAUST

		048ACT	048ACU	048ADT	048ADU	048AJT
Unit Information	Unit Operating Voltage Range	187-253	187-253	414-506	414-506	187-253
	Volts	208/230	208/230	460	460	208/230
	Phase	3	3	3	3	1
	Hz	60	60	60	60	60
	Minimum Circuit Ampacity	25	30	12	13	37
	Minimum Overcurrent Protection Device Size	30	35	15	15	45
	Maximum Overcurrent Protection Device Size	35	40	15	15	50
Compressor Motor	No.	1	1	1	1	1
	Volts	208/230	208/230	460	460	208/230
	Phase	3	3	3	3	1
	Amps (RLA), Comp. 1	12.8	12.8	6	6	22.4
	Amps (LRA), Comp. 1	120.4	120.4	49.4	49.4	126
Condenser Motor	No.	1	1	1	1	1
	Volts	208/230	208/230	460	460	208/230
	Phase	1	1	1	1	1
	HP	1/2	1/2	1/2	1/2	1/2
	Amps (FLA, each)	2.3	2.3	1.5	1.5	2.3
	Amps (LRA, each)	5.1	5.1	3.1	3.1	5.1
Evaporator Fan	No.	1	1	1	1	1
	Volts	208/230	208/230	460	460	208/230
	Phase	1	1	1	1	1
	HP	3/4	1-1/2	3/4	1	3/4
	Amps (FLA, each)	6	11.5	2.7	3.5	6
	Amps (LRA, each)	N/A	N/A	N/A	N/A	N/A

ELECTRICAL DATA – RHPCYB SERIES WITH POWERED EXHAUST

		048ACT	048ACU	048ADT	048ADU	048AJT
Unit Information	Unit Operating Voltage Range	187-253	187-253	414-506	414-506	187-253
	Volts	208/230	208/230	460	460	208/230
	Phase	3	3	3	3	1
	Hz	60	60	60	60	60
	Minimum Circuit Ampacity	28	33	14	15	40
	Minimum Overcurrent Protection Device Size	35	40	20	20	45
	Maximum Overcurrent Protection Device Size	40	45	20	20	60
Compressor Motor	No.	1	1	1	1	1
	Volts	208/230	208/230	460	460	208/230
	Phase	3	3	3	3	1
	Amps (RLA), Comp. 1	12.8	12.8	6	6	22.4
	Amps (LRA), Comp. 1	120.4	120.4	49.4	49.4	126
Condenser Motor	No.	1	1	1	1	1
	Volts	208/230	208/230	460	460	208/230
	Phase	1	1	1	1	1
	HP	1/2	1/2	1/2	1/2	1/2
	Amps (FLA, each)	2.3	2.3	1.5	1.5	2.3
	Amps (LRA, each)	5.1	5.1	3.1	3.1	5.1
Evaporator Fan	No.	1	1	1	1	1
	Volts	208/230	208/230	460	460	208/230
	Phase	1	1	1	1	1
	HP	3/4	1-1/2	3/4	1	3/4
	Amps (FLA, each)	6	11.5	2.7	3.5	6
	Amps (LRA, each)	N/A	N/A	N/A	N/A	N/A

ELECTRICAL DATA – RHPCYB SERIES WITHOUT POWERED EXHAUST

		060ACT	060ACU	060ADT	060ADU	060AJT
Unit Information	Unit Operating Voltage Range	187-253	187-253	414-506	414-506	187-253
	Volts	208/230	208/230	460	460	208/230
	Phase	3	3	3	3	1
	Hz	60	60	60	60	60
	Minimum Circuit Ampacity	33	37	15	15	43
	Minimum Overcurrent Protection Device Size	40	45	20	20	50
	Maximum Overcurrent Protection Device Size	45	50	20	20	60
Compressor Motor	No.	1	1	1	1	1
	Volts	208/230	208/230	460	460	208/230
	Phase	3	3	3	3	1
	Amps (RLA), Comp. 1	16	16	7.1	7.1	23.7
	Amps (LRA), Comp. 1	156.4	156.4	58.1	58.1	157
Condenser Motor	No.	1	1	1	1	1
	Volts	208/230	208/230	460	460	208/230
	Phase	1	1	1	1	1
	HP	1/2	1/2	1/2	1/2	1/2
	Amps (FLA, each)	5.3	5.3	2.3	2.3	5.3
	Amps (LRA, each)	N/A	N/A	N/A	N/A	N/A
Evaporator Fan	No.	1	1	1	1	1
	Volts	208/230	208/230	460	460	208/230
	Phase	1	1	1	1	1
	HP	1	1-1/2	1	1-1/5	1
	Amps (FLA, each)	7.6	11.5	3.5	3.7	7.6
	Amps (LRA, each)	N/A	N/A	N/A	N/A	N/A

ELECTRICAL DATA – RHPCYB SERIES WITH POWERED EXHAUST

		060ACT	060ACU	060ADT	060ADU	060AJT
Unit Information	Unit Operating Voltage Range	187-253	187-253	414-506	414-506	187-253
	Volts	208/230	208/230	460	460	208/230
	Phase	3	3	3	3	1
	Hz	60	60	60	60	60
	Minimum Circuit Ampacity	36	40	17	17	46
	Minimum Overcurrent Protection Device Size	40	45	20	20	60
	Maximum Overcurrent Protection Device Size	50	50	20	20	60
Compressor Motor	No.	1	1	1	1	1
	Volts	208/230	208/230	460	460	208/230
	Phase	3	3	3	3	1
	Amps (RLA), Comp. 1	16	16	7.1	7.1	23.7
	Amps (LRA), Comp. 1	156.4	156.4	58.1	58.1	157
Condenser Motor	No.	1	1	1	1	1
	Volts	208/230	208/230	460	460	208/230
	Phase	1	1	1	1	1
	HP	1/2	1/2	1/2	1/2	1/2
	Amps (FLA, each)	5.3	5.3	2.3	2.3	5.3
	Amps (LRA, each)	N/A	N/A	N/A	N/A	N/A
Evaporator Fan	No.	1	1	1	1	1
	Volts	208/230	208/230	460	460	208/230
	Phase	1	1	1	1	1
	HP	1	1-1/2	1	1-1/5	1
	Amps (FLA, each)	7.6	11.5	3.5	3.7	7.6
	Amps (LRA, each)	N/A	N/A	N/A	N/A	N/A

ELECTRICAL DATA – RHPCYB SERIES WITHOUT POWERED EXHAUST

		072ACT	072ACU	072ADT	072ADU
Unit Information	Unit Operating Voltage Range	187-253	187-253	414-506	414-506
	Volts	208/230	208/230	460	460
	Phase	3	3	3	3
	Hz	60	60	60	60
	Minimum Circuit Ampacity	38	38	18	18
	Minimum Overcurrent Protection Device Size	45	45	20	20
	Maximum Overcurrent Protection Device Size	50	50	25	25
Compressor Motor	No.	1	1	1	1
	Volts	208/230	208/230	460	460
	Phase	3	3	3	3
	Amps (RLA), Comp. 1	19.2	19.2	9.1	9.1
	Amps (LRA), Comp. 1	162	162	70.8	70.8
Condenser Motor	No.	1	1	1	1
	Volts	208/230	208/230	460	460
	Phase	1	1	1	1
	HP	1/2	1/2	1/2	1/2
	Amps (FLA, each)	5.3	5.3	2.3	2.3
	Amps (LRA, each)	N/A	N/A	N/A	N/A
Evaporator Fan	No.	1	1	1	1
	Volts	208/230	208/230	460	460
	Phase	1	1	1	1
	HP	1-1/5	1-1/5	1-1/5	1-1/5
	Amps (FLA, each)	8.5	8.5	3.7	3.7
	Amps (LRA, each)	N/A	N/A	N/A	N/A

ELECTRICAL DATA – RHPCYB SERIES WITH POWERED EXHAUST

		072ACT	072ACU	072ADT	072ADU
Unit Information	Unit Operating Voltage Range	187-253	187-253	414-506	414-506
	Volts	208/230	208/230	460	460
	Phase	3	3	3	3
	Hz	60	60	60	60
	Minimum Circuit Ampacity	41	41	20	20
	Minimum Overcurrent Protection Device Size	50	50	25	25
	Maximum Overcurrent Protection Device Size	60	60	25	25
Compressor Motor	No.	1	1	1	1
	Volts	208/230	208/230	460	460
	Phase	3	3	3	3
	Amps (RLA), Comp. 1	19.2	19.2	9.1	9.1
	Amps (LRA), Comp. 1	162	162	70.8	70.8
Condenser Motor	No.	1	1	1	1
	Volts	208/230	208/230	460	460
	Phase	1	1	1	1
	HP	1/2	1/2	1/2	1/2
	Amps (FLA, each)	5.3	5.3	2.3	2.3
	Amps (LRA, each)	N/A	N/A	N/A	N/A
Evaporator Fan	No.	1	1	1	1
	Volts	208/230	208/230	460	460
	Phase	1	1	1	1
	HP	1-1/5	1-1/5	1-1/5	1-1/5
	Amps (FLA, each)	8.5	8.5	3.7	3.7
	Amps (LRA, each)	N/A	N/A	N/A	N/A

208/230V, Three Phase, 60 Hz, Auxiliary Electric Heater Kit Characteristics and Application													
Single Power Supply for Both Unit and Heater Kit								Separate Power Supply for Both Unit and Heater Kit					
	Heater Kit			Air Conditioner				Heater Kit		Air Conditioner			
Unit Model Number RHPCYB	Model No. RXJJ-	Rated Heater KW @ 208/230V	FLA	Unit Min. Ckt. Ampacity	Unit Min. Ckt. Ampacity With Optional Powered Exhaust	Max. Fuse or Ckt. Bkr. Size	Max. Fuse or Ckt. Bkr. Size With Optional Powered Exhaust	Heater Kit Min. Ckt. Ampacity	Heater Kit Max. Fuse or Ckt. Bkr. Size	Air Cond. Min. Ckt. Ampacity	Air Cond. Min. Ckt. Ampacity With Optional Powered Exhaust	Air Cond. Max. Fuse or Ckt. Bkr. Size	Air Cond. Max. Fuse or Ckt. Bkr. Size With Optional Powered Exhaust
036ACT	NONE*	—/—	—/—	23/23	26/26	30/30	35/35	—	—	23/23	26/26	30/30	35/35
	DC10CP	7.5/10.0	20.9/24.1	49/53	52/56	50/60	60/60	27/31	30/35	23/23	26/26	30/30	35/35
	DC15CP	11.3/15.0	31.4/36.2	62/68	65/71	70/70	70/80	40/46	40/50	23/23	26/26	30/30	35/35
	DC20CP	15.0/20.0	41.7/48.1	75/83	78/86	80/90	80/90	53/61	60/70	23/23	26/26	30/30	35/35
036ACU	NONE*	—/—	—/—	28/28	32/32	40/40	40/40	—	—	28/28	32/32	40/40	40/40
	DC10CP	7.5/10.0	20.9/24.1	55/59	58/62	60/60	60/70	27/31	30/35	28/28	32/32	40/40	40/40
	DC15CP	11.3/15.0	31.4/36.2	68/74	71/77	70/80	80/80	40/46	40/50	28/28	32/32	40/40	40/40
	DC20CP	15.0/20.0	41.7/48.1	81/89	84/92	90/90	90/100	53/61	60/70	28/28	32/32	40/40	40/40
048ACT	NONE*	—/—	—/—	25/25	28/28	35/35	40/40	—	—	25/25	28/28	35/35	40/40
	DC10CP	7.5/10.0	20.9/24.1	51/55	54/58	60/60	60/60	27/31	30/35	25/25	28/28	35/35	40/40
	DC15CP	11.3/15.0	31.4/36.2	64/70	67/73	70/70	70/80	40/46	40/50	25/25	28/28	35/35	40/40
	DC20CP	15.0/20.0	41.7/48.1	77/85	80/88	80/90	80/90	53/61	60/70	25/25	28/28	35/35	40/40
048ACU	NONE*	—/—	—/—	30/30	33/33	40/40	45/45	—	—	30/30	33/33	40/40	45/45
	DC10CP	7.5/10.0	20.9/24.1	56/60	60/64	60/60	60/70	27/31	30/35	30/30	33/33	40/40	45/45
	DC15CP	11.3/15.0	31.4/36.2	70/76	73/79	70/80	80/80	40/46	40/50	30/30	33/33	40/40	45/45
	DC20CP	15.0/20.0	41.7/48.1	82/90	86/94	90/90	90/100	53/61	60/70	30/30	33/33	40/40	45/45
060ACT	NONE*	—/—	—/—	33/33	36/36	45/45	50/50	—	—	33/33	36/36	45/45	50/50
	DC10CP	7.5/10.0	20.9/24.1	60/64	63/67	60/70	70/70	27/31	30/35	33/33	36/36	45/45	50/50
	DC15CP	11.3/15.0	31.4/36.2	73/79	76/82	80/80	80/90	40/46	40/50	33/33	36/36	45/45	50/50
	DC20CP	15.0/20.0	41.7/48.1	86/94	89/97	90/100	90/100	53/61	60/70	33/33	36/36	45/45	50/50
060ACU	NONE*	—/—	—/—	37/37	40/40	50/50	50/50	—	—	37/37	40/40	50/50	50/50
	DC10CP	7.5/10.0	20.9/24.1	63/67	67/71	70/70	70/80	27/31	30/35	37/37	40/40	50/50	50/50
	DC15CP	11.3/15.0	31.4/36.2	77/83	80/86	80/90	80/90	40/46	40/50	37/37	40/40	50/50	50/50
	DC20CP	15.0/20.0	41.7/48.1	89/97	93/101	90/100	100/110	53/61	60/70	37/37	40/40	50/50	50/50
072ACT	NONE*	—/—	—/—	38/38	41/41	50/50	60/60	—	—	38/38	41/41	50/50	60/60
	DC15CP	11.3/15.0	31.4/36.2	78/84	81/87	80/90	90/90	40/46	40/50	38/38	41/41	50/50	60/60
	DC20CP	15.0/20.0	41.7/48.1	90/98	94/102	90/100	100/110	53/61	60/70	38/38	41/41	50/50	60/60
	DC24CP	18.0/24.0	50.0/57.7	101/110	104/114	110/110	110/125	63/73	70/80	38/38	41/41	50/50	60/60
072ACU	NONE*	—/—	—/—	38/38	41/41	50/50	60/60	—	—	38/38	41/41	50/50	60/60
	DC15CP	11.3/15.0	31.4/36.2	78/84	81/87	80/90	90/90	40/46	40/50	38/38	41/41	50/50	60/60
	DC20CP	15.0/20.0	41.7/48.1	90/98	94/102	90/100	100/110	53/61	60/70	38/38	41/41	50/50	60/60
	DC24CP	18.0/24.0	50.0/57.7	101/110	104/114	110/110	110/125	63/73	70/80	38/38	41/41	50/50	60/60

460V, Three Phase, 60 Hz, Auxiliary Electric Heater Kit Characteristics and Application													
Single Power Supply for Both Unit and Heater Kit								Separate Power Supply for Both Unit and Heater Kit					
	Heater Kit			Air Conditioner				Heater Kit		Air Conditioner			
Unit Model Number RHPCYB	Model No. RXJJ-	Rated Heater KW @ 460V	FLA	Unit Min. Ckt. Ampacity	Unit Min. Ckt. Ampacity With Optional Powered Exhaust	Max. Fuse or Ckt. Bkr. Size	Max. Fuse or Ckt. Bkr. Size With Optional Powered Exhaust	Heater Kit Min. Ckt. Ampacity	Heater Kit Max. Fuse or Ckt. Bkr. Size	Air Cond. Min. Ckt. Ampacity	Air Cond. Min. Ckt. Ampacity With Optional Powered Exhaust	Air Cond. Max. Fuse or Ckt. Bkr. Size	Air Cond. Max. Fuse or Ckt. Bkr. Size With Optional Powered Exhaust
036ADT	NONE*	—	—	11	13	15	15	—	—	11	13	15	15
	DC10DNV	10.0	12.0	26	28	30	30	15	15	11	13	15	15
	DC15DNV	15.0	18.1	34	36	35	40	23	25	11	13	15	15
	DC20DNV	20.0	24.1	41	43	45	45	31	35	11	13	15	15
036ADU	NONE*	—	—	12	14	15	20	—	—	12	14	15	15
	DC10DNV	10.0	12.0	27	29	30	30	15	15	12	14	15	15
	DC15DNV	15.0	18.1	35	37	35	40	23	25	12	14	15	15
	DC20DNV	20.0	24.1	42	44	45	45	31	35	12	14	15	15
048ADT	NONE*	—	—	12	14	15	20	—	—	12	14	15	15
	DC10DNV	10.0	12.0	27	29	30	30	15	15	12	14	15	15
	DC15DNV	15.0	18.1	35	37	35	40	23	25	12	14	15	15
	DC20DNV	20.0	24.1	42	44	45	45	31	35	12	14	15	15
048ADU	NONE*	—	—	13	15	15	20	—	—	13	15	15	20
	DC10DNV	10.0	12.0	28	30	30	30	15	15	13	15	15	20
	DC15DNV	15.0	18.1	36	38	40	40	23	25	13	15	15	20
	DC20DNV	20.0	24.1	43	45	45	45	31	35	13	15	15	20
060ADT	NONE*	—	—	15	17	20	20	—	—	15	17	20	20
	DC10DNV	10.0	12.0	30	32	30	35	15	15	15	17	20	20
	DC15DNV	15.0	18.1	38	40	40	40	23	25	15	17	20	20
	DC20DNV	20.0	24.1	45	47	45	50	31	35	15	17	20	20
060ADU	NONE*	—	—	15	17	20	20	—	—	15	17	20	20
	DC10DNV	10.0	12.0	30	32	30	35	15	15	15	17	20	20
	DC15DNV	15.0	18.1	38	40	40	40	23	25	15	17	20	20
	DC20DNV	20.0	24.1	45	48	45	50	31	35	15	17	20	20
072ADT	NONE*	—	—	18	20	25	25	—	—	18	20	25	25
	DC15DNV	15.0	18.1	40	43	40	45	23	25	18	20	25	25
	DC20DNV	20.0	24.1	48	50	50	50	31	35	18	20	25	25
	DC24DNV	24.0	28.9	54	56	60	60	37	40	18	20	25	25
072ADU	NONE*	—	—	18	20	25	25	—	—	18	20	25	25
	DC15DNV	15.0	18.1	40	43	40	45	23	25	18	20	25	25
	DC20DNV	20.0	24.1	48	50	50	50	31	35	18	20	25	25
	DC24DNV	24.0	28.9	54	56	60	60	37	40	18	20	25	25

208/230V Single Phase, 60 Hz, Auxiliary Electric Heater Kit Characteristics and Application													
Single Power Supply for Both Unit and Heater Kit								Separate Power Supply for Both Unit and Heater Kit					
Unit Model Number RHPCYB	Heater Kit			Air Conditioner				Heater Kit		Air Conditioner			
	Model No. RXJJ-	Rated Heater KW @ 208/230V	FLA	Unit Min. Ckt. Ampacity	Unit Min. Ckt. Ampacity With Optional Powered Exhaust	Max. Fuse or Ckt. Bkr. Size	Max. Fuse or Ckt. Bkr. Size With Optional Powered Exhaust	Heater Kit Min. Ckt. Ampacity	Heater Kit Max. Fuse or Ckt. Bkr. Size	Air Cond. Min. Ckt. Ampacity	Air Cond. Min. Ckt. Ampacity With Optional Powered Exhaust	Air Cond. Max. Fuse or Ckt. Bkr. Size	Air Cond. Max. Fuse or Ckt. Bkr. Size With Optional Powered Exhaust
036AJT	NONE*	—/—	—/—	29/29	32/32	40/40	45/45	—	—	29/29	32/32	40/40	45/45
	DC10JT	7.5/10.0	36.2/41.7	74/81	77/84	80/90	80/90	46/53	50/60	29/29	32/32	40/40	45/45
	DC15JT	11.3/15.0	54.3/62.7	96/107	100/110	100/110	100/110	68/79	70/80	29/29	32/32	40/40	45/45
	DC20JT	15.0/20.0	72.2/83.3	119/133	122/136	125/150	125/150	91/105	100/110	29/29	32/32	40/40	45/45
048AJT	NONE*	—/—	—/—	37/37	40/40	50/50	60/60	—	—	37/37	40/40	50/50	60/60
	DC10JT	7.5/10.0	36.2/41.7	82/89	85/92	90/100	90/100	46/53	50/60	37/37	40/40	50/50	60/60
	DC15JT	11.3/15.0	54.3/62.7	105/115	108/118	110/125	110/125	68/79	70/80	37/37	40/40	50/50	60/60
	DC20JT	15.0/20.0	72.2/83.3	127/141	130/144	150/150	150/150	91/105	100/110	37/37	40/40	50/50	60/60
060AJT	NONE*	—/—	—/—	43/43	46/46	60/60	60/60	—	—	43/43	46/46	60/60	60/60
	DC10JT	7.5/10.0	36.2/41.7	88/95	91/98	100/100	100/110	46/53	50/60	43/43	46/46	60/60	60/60
	DC15JT	11.3/15.0	54.3/62.7	111/121	114/124	125/125	125/125	68/79	70/80	43/43	46/46	60/60	60/60
	DC20JT	15.0/20.0	72.2/83.3	133/147	136/150	150/150	150/150	91/105	100/110	43/43	46/46	60/60	60/60

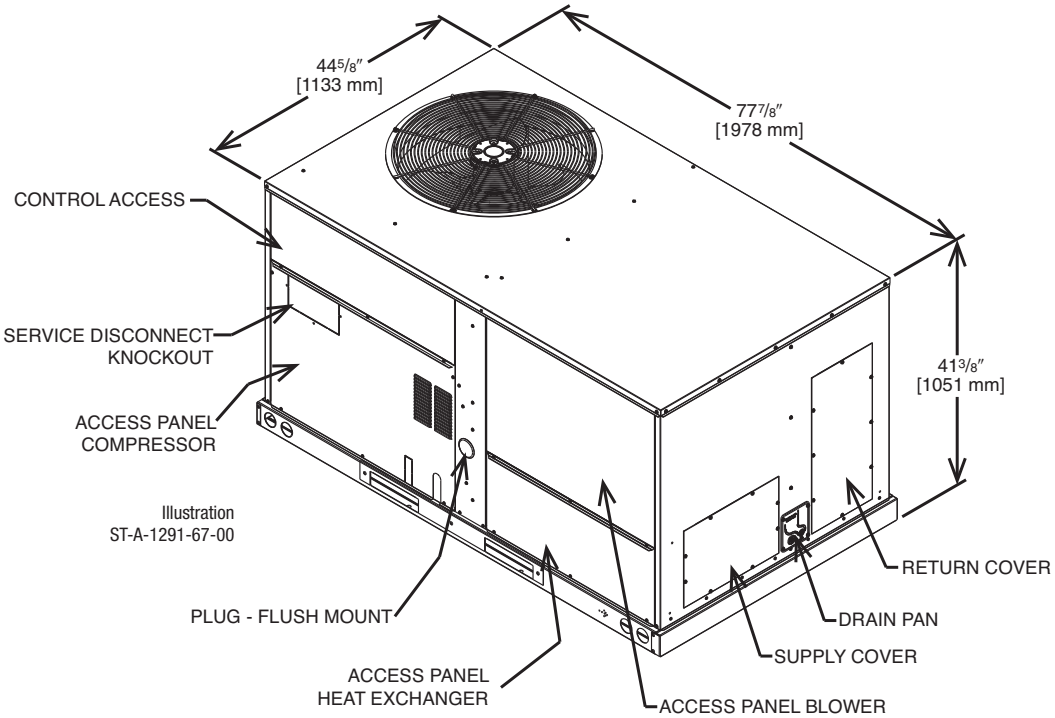

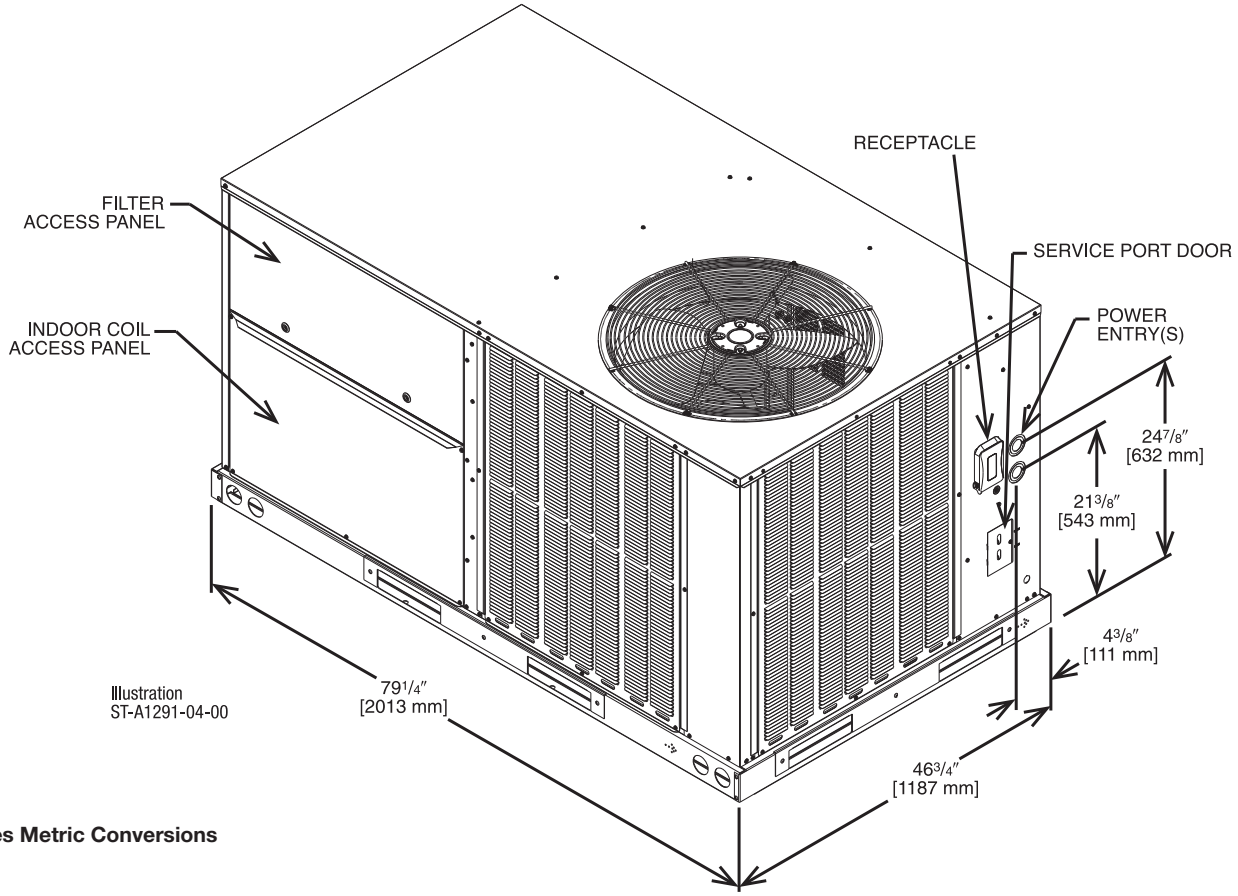

[ ] Designates Metric Conversions

SUPPLY AND RETURN DIMENSIONS FOR HORIZONTAL APPLICATIONS (SIDE VIEW)

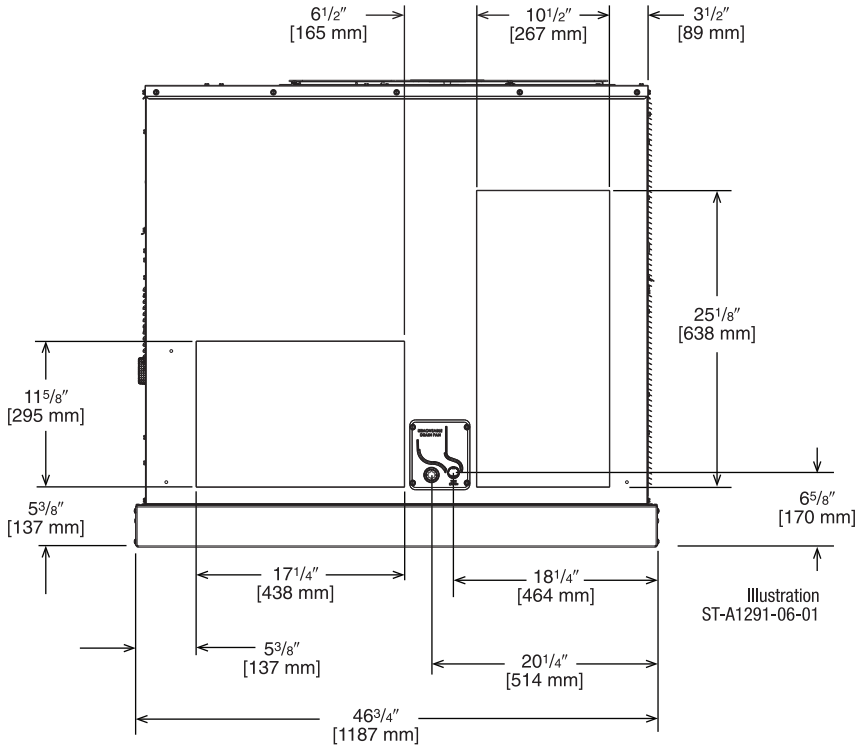

Illustration
ST-A1291-06-01

SUPPLY AND RETURN DIMENSIONS FOR DOWNFLOW APPLICATIONS (BOTTOM VIEW)

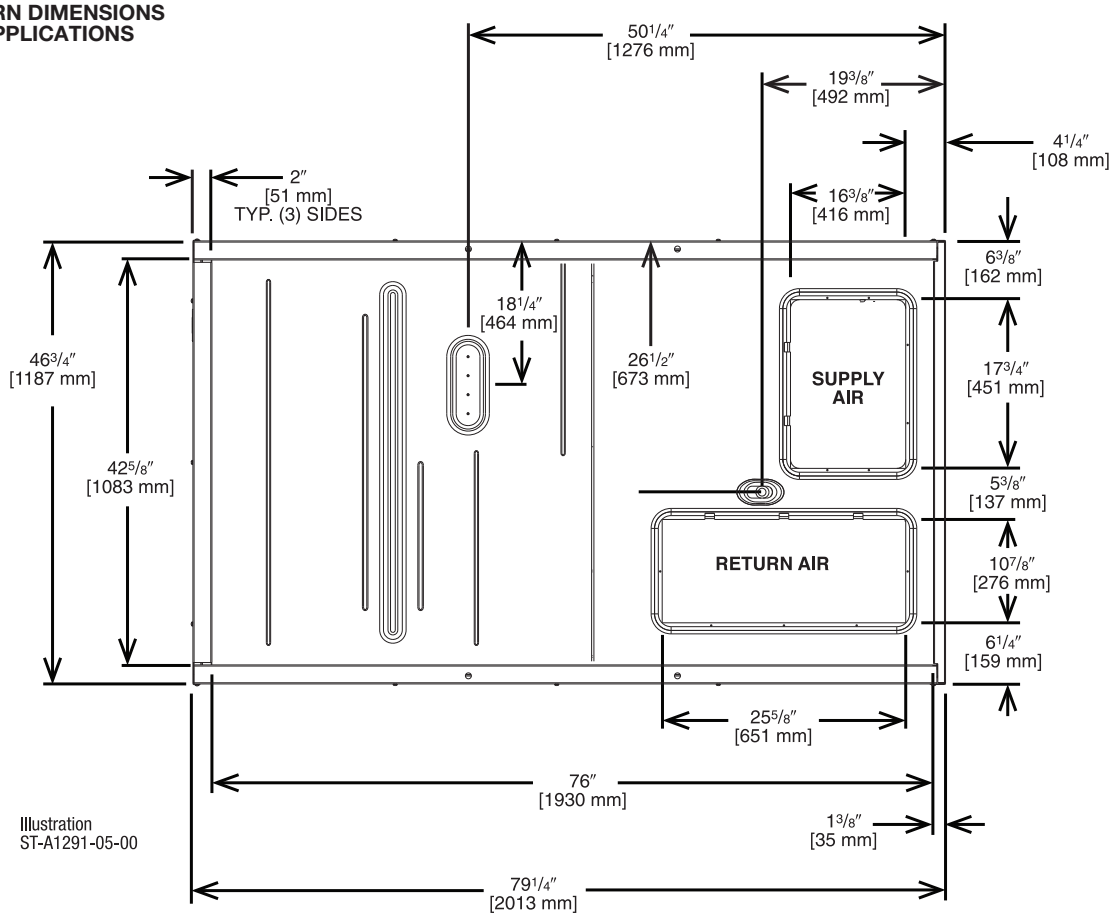

Illustration
ST-A1291-05-00

[ ] Designates Metric Conversions

WEIGHTS

Capacity Tons [kW]	Corner Weights by Percentage			
	A	B	C	D
3.0-6.0 [10.6-21.1]	18%	40%	19%	23%

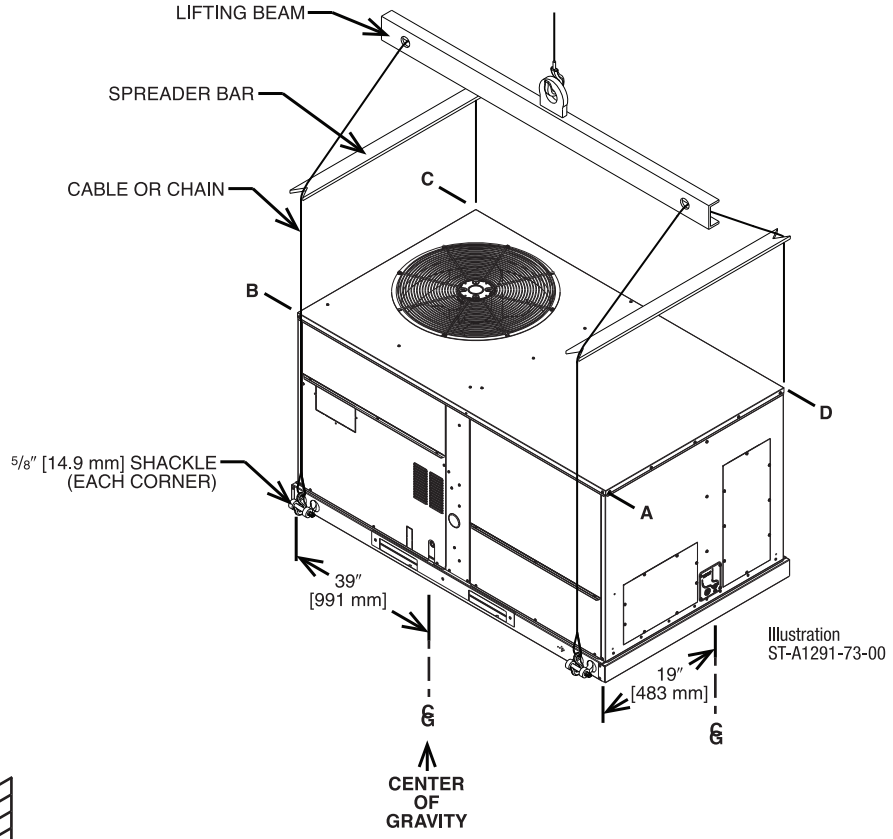

Illustration
ST-A1291-73-00

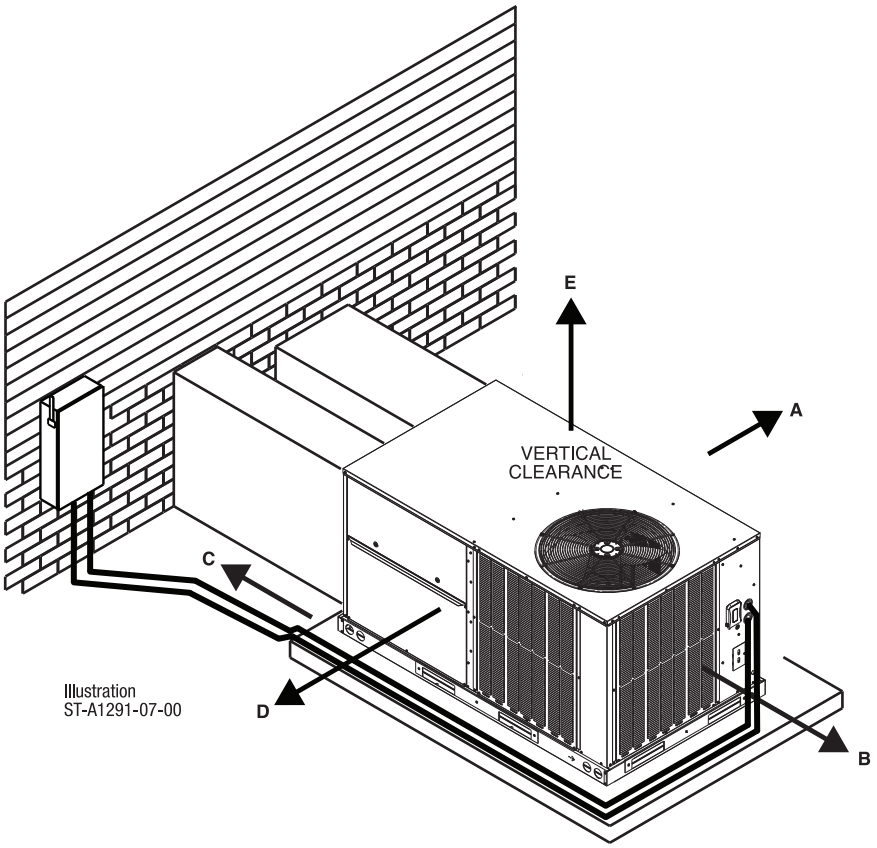

Illustration
ST-A1291-07-00

CLEARANCES

THE FOLLOWING MINIMUM CLEARANCES MUST BE OBSERVED FOR PROPER UNIT PERFORMANCE AND SERVICEABILITY.

RECOMMENDED CLEARANCE In. [mm]	LOCATION
48 [1219]	A - FRONT
24 [609]	B - CONDENSER END
48 [1219] ①	C - DUCT END
24 [609] ②	*D - FILTER SIDE
60 [1524]	E - ABOVE

① 18" [457 mm] MINIMUM IF DRAINPAN WILL NOT BE REMOVED.

② 48" [1219 MM] MINIMUM IF ECONOMIZER IS INSTALLED.

[ ] Designates Metric Conversions

FIELD-INSTALLED ACCESSORY EQUIPMENT

Accessory	Model Number	Shipping Weight Lbs. [kg]	Installed Weight Lbs. [kg]	Factory Installation Available?
Comfort Alert (1 Phase) DDC	RXRX-AZ03	3 [1.5]	2 [0.9]	Yes
Comfort Alert (1 Phase) Non-DDC	RXRX-AZ04	3 [1.5]	2 [0.9]	Yes
Comfort Alert (3 Phase) DDC	RXRX-AZ01	3 [1.5]	2 [0.9]	Yes
Comfort Alert (3 Phase) Non-DDC	RXRX-AZ02	3 [1.5]	2 [0.9]	Yes
Communication Card, BACnet	RXRX-AY01	1 [0.5]	1 [0.5]	No
Communication Card, LonWorks	RXRX-AY02	1 [0.5]	1 [0.5]	No
Concentric Adapter 3-4 Ton Drop	RXMC-DC01	35 [15.9]	30 [13.6]	No
Concentric Adapter 5-6 Ton Drop	RXMC-DC02	40 [18.2]	35 [15.9]	No
Concentric Diffuser 3-4 Ton Drop	RXRN-AED1800	35 [15.9]	30 [13.6]	No
Concentric Diffuser 5-6 Ton Drop	RXRN-AED2000	35 [15.9]	30 [13.6]	No
Concentric Diffuser 3-4 Ton Flush	RXRN-AEF1800	30 [13.6]	25 [11.3]	No
Concentric Diffuser 5-6 Ton Flush	RXRN-AEF2000	30 [13.6]	25 [11.3]	No
Convenience Outlet, Nonpowered	RXRX-BN01	2 [1.0]	1.5 [0.7]	Yes
Dual Enthalpy Kit (for Honeywell Jade)	RXRX-BV01	1 [0.5]	1 [0.5]	No
Dual Enthalpy Kit DDC (for Honeywell DDC)	RXRX-BV02	1 [0.5]	1 [0.5]	No
Dual Enthalpy, Temperature and Humidity Sensor (for Ruskin Basic Controller)	PD955878	1 [0.5]	1 [0.5]	No
Dual Enthalpy, Temperature and Humidity Sensor (for Siemens)	PD555460	1 [0.5]	1 [0.5]	No
Economizer Universal DDC Interface Kit	RXRX-DDC01	5 [2.7]	3.5 [1.6]	Yes
Economizer with No Controls (Downflow/Vertical) *MicroMetl Economizer, No Controls, Belimo Actuator*	RXRD-31MCDAM3	100 [45.4]	66 [29.9]	No
Economizer w/Single Enthalpy (Downflow/Vertical) *MicroMetl Economizer with Honeywell Jade Controller*	RXRD-01MCDAM3	100 [45.4]	66 [29.9]	Yes
Economizer w/Single Enthalpy (Downflow/Vertical) *MicroMetl Economizer with Siemens Controls*	RXRD-11MCDAM3	100 [45.4]	66 [29.9]	Yes
Economizer w/Single Enthalpy (Downflow/Vertical) *Ruskin Rooftop Systems with RRS Basic Controller*	RXRD-41MCDAM3	100 [45.4]	66 [29.9]	Yes
Economizer-w/Single Enthalpy (Downflow/Vertical) DDC *MicroMetl Economizer with Honeywell DDC Controller*	RXRD-01MCDBM3	100 [45.4]	66 [29.9]	Yes
Economizer w/Single Enthalpy (Horizontal) *MicroMetl Economizer with Honeywell Jade Controller*	RXRD-01MCHAM3	72 [32.7]	69 [31.3]	No
Economizer w/Single Enthalpy (Horizontal) *MicroMetl Economizer with Siemens Controls*	RXRD-11MCHAM3	72 [32.7]	69 [31.3]	No
Economizer w/Single Enthalpy (Horizontal) *Ruskin Rooftop Systems with RRS Basic Controller*	RXRD-41MCHAM3	72 [32.7]	69 [31.3]	No
Economizer w/Single Enthalpy (Horizontal) DDC *MicroMetl Economizer with Honeywell DDC Controller*	RXRD-01MCHBM3	72 [32.7]	69 [31.3]	No
Electric Heater Kits*	RXJJ-DC10JT	10 [4.5]	8 [3.6]	Yes
	RXJJ-DC15JT	13 [5.9]	11 [5.0]	Yes
	RXJJ-DC20JT	14 [6.4]	12 [5.4]	Yes
	RXJJ-DC10CP	10 [4.5]	8 [3.6]	Yes
	RXJJ-DC15CP	13 [5.9]	11 [5.0]	Yes
	RXJJ-DC20CP	14 [6.4]	12 [5.4]	Yes
	RXJJ-DC24CP	14 [6.4]	12 [5.4]	Yes
	RXJJ-DC10DNV	10 [4.5]	8 [3.6]	Yes
	RXJJ-DC15DNV	13 [5.9]	11 [5.0]	Yes
	RXJJ-DC20DNV	14 [6.4]	12 [5.4]	Yes
	RXJJ-DC24DNV	14 [6.4]	12 [5.4]	Yes
Freeze Stat Kit	RXRX-AM05	2 [1.0]	1.5 [0.7]	Yes
Fresh Air Damper, Manual	RXRF-ACA1	22 [10.0]	18 [8.2]	No
Fresh Air Damper, Motorized	RXRF-ACB1	53 [24.0]	43 [19.5]	No
Fresh Air Damper, Motorized (DDC)	RXRF-ACA1	53 [24.0]	43 [19.5]	No
Low-Ambient Control Kit	RXRZ-A04	4 [1.8]	3 [1.4]	Yes

*10kW options not available on 6 Ton models.

[ ] Designates Metric Conversions

FIELD-INSTALLED ACCESSORY EQUIPMENT (CON'T.)

Accessory	Model Number	Shipping Weight Lbs. [kg]	Installed Weight Lbs. [kg]	Factory Installation Available?
MERV 8 Filter	RXMF-M08A21616	2 [.90]	1 [.45]	No
MERV 13 Filter	RXMF-M13A21616	2 [.90]	1 [.45]	No
Outdoor Coil Louver Kit	RXRX-ADD04C	30 [13.6]	25 [11.3]	Yes
Power Exhaust (230V) Horizontal *MicroMetl*	RXRX-CCF03C	42 [19.1]	39 [17.7]	No
Power Exhaust (230V) Horizontal *Ruskin Rooftop Systems*	RXRX-RCF03C	42 [19.1]	39 [17.7]	No
Power Exhaust (230V) Vertical *MicroMetl*	RXRX-CCF02C	24 [10.9]	21 [9.5]	No
Power Exhaust (230V) Vertical *Ruskin Rooftop Systems*	RXRX-RCF02C	24 [10.9]	21 [9.5]	No
Power Exhaust (460V) Horizontal *MicroMetl*	RXRX-CCF03D	42 [19.1]	39 [17.7]	No
Power Exhaust (460V) Horizontal *Ruskin Rooftop Systems*	RXRX-RCF03D	42 [19.1]	39 [17.7]	No
Power Exhaust (460V) Vertical MicroMetl	RXRX-CCF02D	20 [9.1]	17 [7.7]	No
Power Exhaust (460V) Vertical *Ruskin Rooftop Systems*	RXRX-RCF02D	20 [9.1]	17 [7.7]	No
Roofcurb, 14"	RXKG-DCC14	94 [42.6]	90 [40.8]	No
Roofcurb, 24"	RXKG-DCC24	124 [56.2]	120 [54.4]	No
Roofcurb Adapter	RXRX-DCCAE	159 [72.1]	145 [65.8]	No
Sensor, Carbon Dioxide (Wall Mount)	RXRX-AR02	1 [0.5]	1 [0.5]	No
Sensor, Room Humidity	RHC-ZNS4	1 [0.5]	1 [0.5]	No
Sensor, Room Temperature and Relative Humidity	RHC-ZNS5	1 [0.5]	1 [0.5]	No
Single Point Wiring Kits	RXJX-AJ0601 (Single Phase)	20 [9.1]	17 [7.7]	No
	RXJX-AZ0601 (Three Phase)	23 [10.4]	20 [9.1]	No
Smoke Detector, Return (Field kit)	RXRX-BS01	7 [3.2]	6 [2.7]	No
Smoke Detector, Return/Supply (Field kit)	RXRX-BS02	5 [2.3]	4 [1.8]	No
Unfused Service Disconnect	RXRX-BP01	10 [4.5]	9 [4.1]	Yes

[ ] Designates Metric Conversions

COMMUNICATION CARDS

BACnet COMMUNICATION CARD RXRX-AY01

The field-installed BACnet Communication Card allows the RTU-C unit controller to communicate with a third party building management system that supports the BACnet Application Specific Controller device profile. The BACnet Communication Module plugs onto the unit RTU-C controller and allows communication between the RTU-C and the BACnet MSTP network.

LonWorks COMMUNICATION CARD RXRX-AY02

The field-installed LonWorks Communication Card allows the RTU-C unit controller to communicate with a third party building management system that supports the LonMark Space Comfort Controller (SCC) functional profile or LonMark Discharge Air Controller (DAC) functional profile. The LonMark Communication Module plugs onto the RTU-C controller and allows communication between the RTU-C and a LonWorks Network.

ELECTRIC HEAT AND SINGLE POINT WIRING

The field or factory electric heater kits are available in 10, 15 and 20 kW heating inputs, and for both single and 3-phase applications. The single point wiring kit is only available as a field installation accessory for units using electric heat, and also available for both single and 3-phase applications.

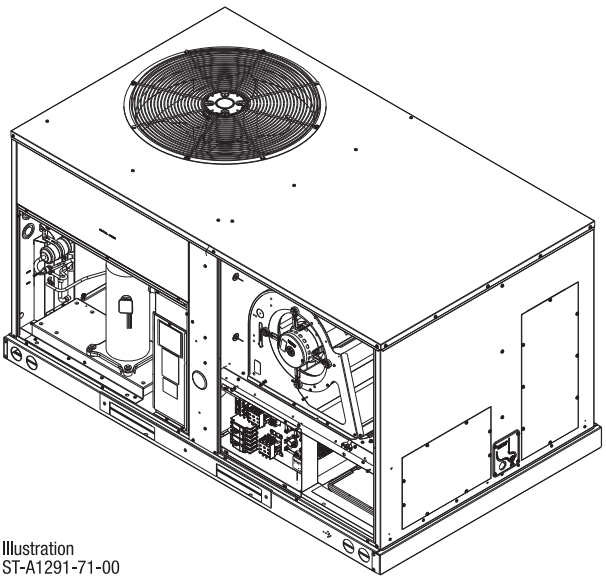

Illustration
ST-A1291-71-00

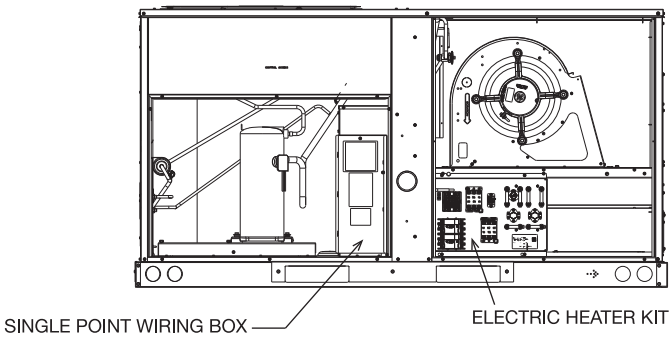

NON-DDC ECONOMIZER FOR DOWNFLOW DUCT INSTALLATION

Factory or Field-Installed

RXRD-01MCDAM3—Single Enthalpy (Outdoor)
RXRX-BV01—Dual Enthalpy Upgrade Kit
RXRX-AR02—Optional Wall-Mounted CO2 Sensor

- Features **Honeywell** JADE Digital Controls
- Available Factory-Installed or Field Accessory
- Gear Driven Direct Drive Actuator
- Fully Modulating (0-100%)
- Ultra Low Leak Dampers meet California Title 24 requirements and ASHRAE 90.1 2022
- AMCA 511 Certified Class 1A Leakage—1" WG of differential pressure tested to AMCA Standard 500-D
- Slip-In Design for Easy Installation
- Plug-In Polarized 12-pin Electrical Connections
- Standard Barometric Relief Damper
- Single Enthalpy with Dual Enthalpy Upgrade Kit Available
- CO2 Input Sensor Option Available
- Field Assembled Hood Ships with Economizer
- Economizer Ships Complete for Downflow Duct Application
- Field-Installed Power Exhaust Option Available
- Fault detection and diagnostics

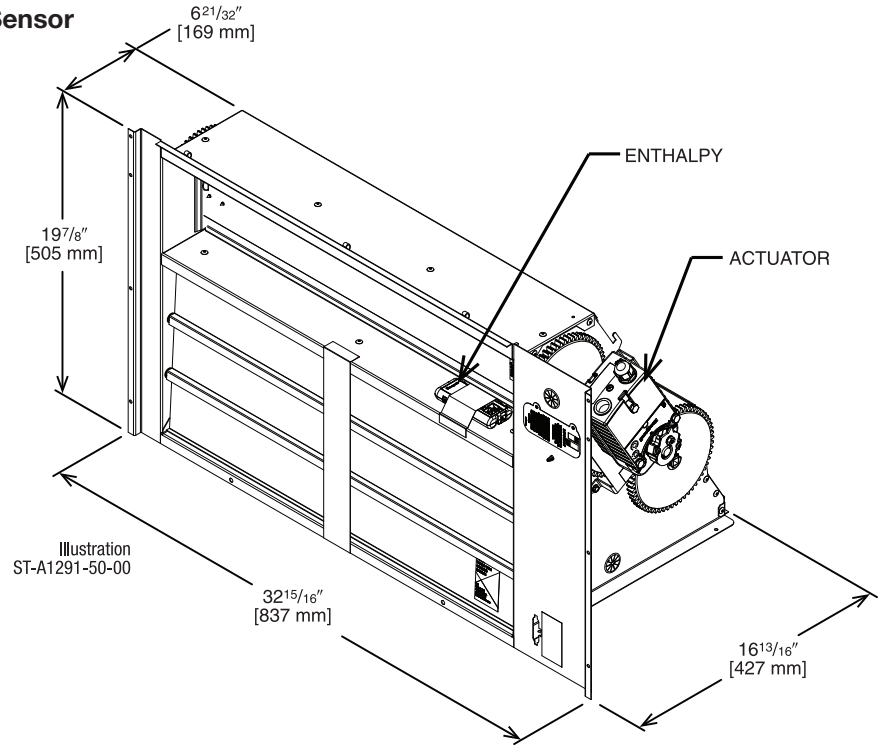

Illustration
ST-A1291-50-00

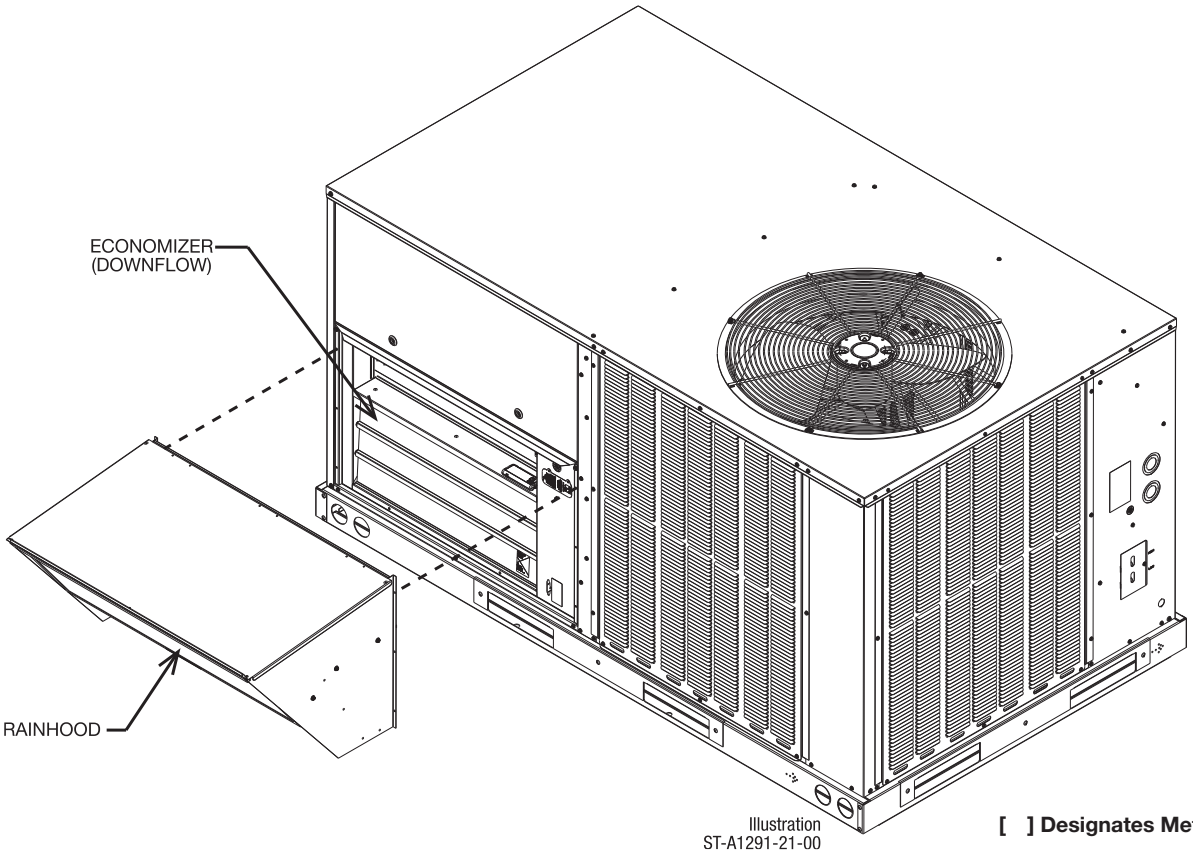

Illustration
ST-A1291-21-00

[ ] Designates Metric Conversions

NON-DDC ECONOMIZER FOR DOWNFLOW DUCT INSTALLATION

Field-Installed Only

RXRD-11MCDAM3—Single Enthalpy (Outdoor)
PD555460—Dual Enthalpy Upgrade Kit
RXRX-AR02—Optional Wall-Mounted CO2 Sensor

- Features **Siemens** Climatix ECO® Economizer Controller
- Gear Driven Direct Drive Actuator
- Fully Modulating (0-100%)
- Ultra Low Leak Dampers meet California Title 24 requirements and ASHRAE 90.1 2022
- AMCA 511 Certified Class 1A Leakage — 1" WG of differential pressure tested to AMCA Standard 500-D
- Slip-In Design for Easy Installation
- Plug-In Polarized 12-pin Electrical Connections
- Standard Barometric Relief Damper
- Single Enthalpy or Dry Bulb with Return Air Enthalpy Option
- CO2 Input Sensor Option Available
- Field Assembled Hood Ships with Economizer
- Economizer Ships Complete for Downflow Duct Application
- Field-Installed Power Exhaust Option Available
- Fault detection and diagnostics

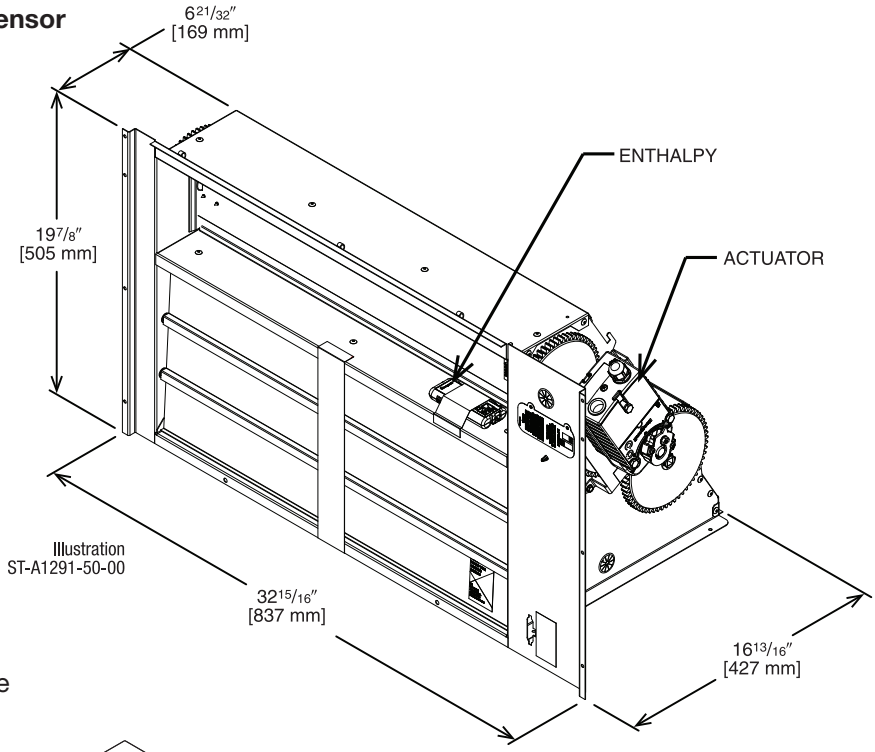

Illustration
ST-A1291-50-00

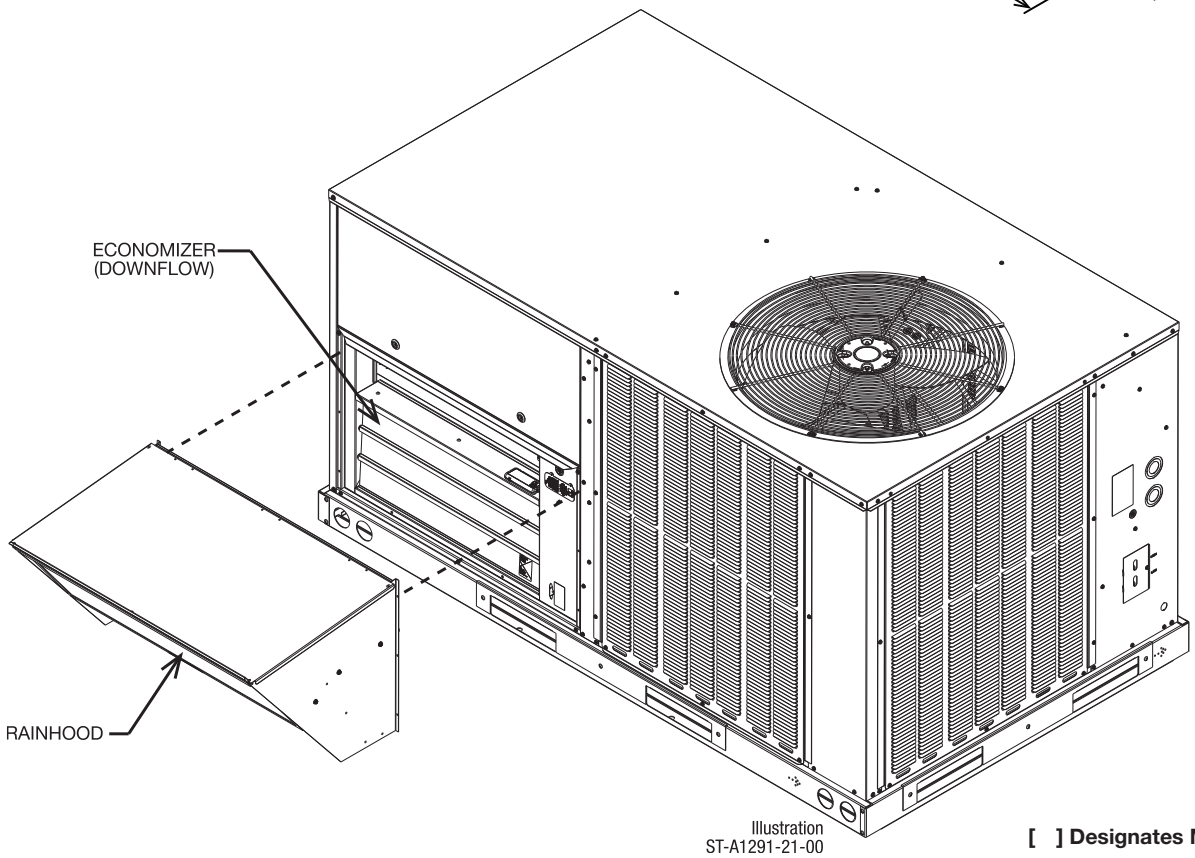

Illustration
ST-A1291-21-00

[ ] Designates Metric Conversions

NON-DDC ECONOMIZER FOR DOWNFLOW DUCT INSTALLATION

Field-Installed Only

RXRD-41MCDAM3—Single Enthalpy (Outdoor)
PD555878—Temperature and Humidity Sensor for Dual Enthalpy (for Ruskin Basic Controller Only)
RXRX-AR02—Optional Wall-Mounted CO2 Sensor

These ultra-low leak economizer dampers meet the following minimum construction standards:

1. Frame shall be 14 to 24 gauge galvanized steel channel.
2. Damper blades are galvanized steel airfoil shaped, double skin construction of 14 gauge [2.0] equivalent thickness, 6" [152 mm] wide.
3. Blade edge seals shall be Ruskiprene™ type or equivalent suitable for -72°F [-60°C] to +275°F [+135°C] mechanically locked into the blade edge. Adhesive or clip-on type seals are unacceptable.
4. Jamb seals shall be flexible metal, compression type to prevent leakage between blade end and damper frame. Blade end overlapping frame is unacceptable.
5. Bearings shall be stainless steel or nylon bushing.
6. Axles shall be hexagonal positively locked into the damper blade.
7. Drive mechanism shall be concealed out of airstream to reduce pressure drop and noise.
8. Economizer damper is tested and rated based upon AMCA Publication 500-D.
9. RRS controls feature the Basic economizer controller with 24v actuator. Controls capable of Economizer Fault Detection and Diagnostics for code compliance.
10. Damper shall meet the leakage requirements of the International Energy Conservation Code by leaking less than 3 cfm/sq. ft. at 1" of static pressure and shall be AMCA licensed as a class 1A damper. Complies with reliability and performance requirements as specified by the California Energy Commission's Title 24 Standard and ASHRAE 90.1. Economizer dampers shall be Ruskin Rooftop Systems ECD60 model.

[ ] Designates Metric Conversions

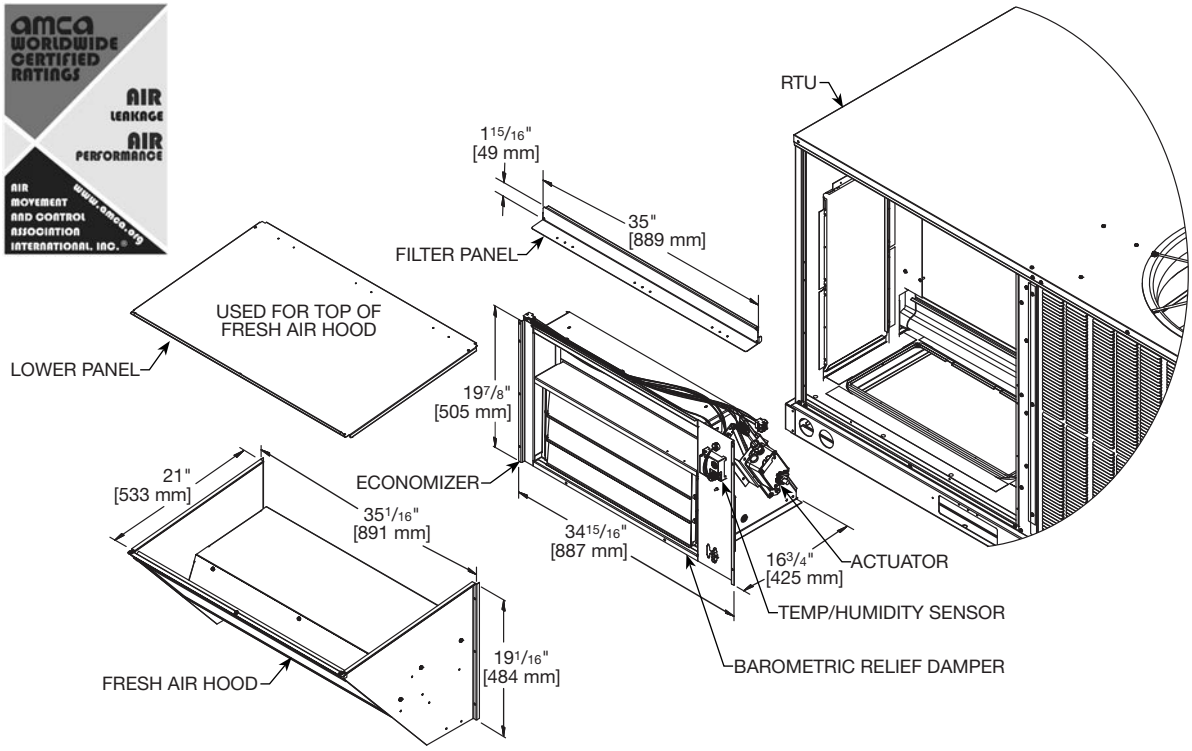

*Components not shown

NON-DDC ECONOMIZER FOR HORIZONTAL DUCT INSTALLATION

Field-Installed Only

RXRD-01MCHAM3—Single Enthalpy (Outdoor)
RXRX-BV01—Dual Enthalpy Upgrade Kit
RXRX-AR02—Wall-mounted CO2 Sensor

- Features **Honeywell** JADE Digital Controls
- Available as a Field-Installed Accessory Only
- Gear Driven Direct Drive Actuator
- Fully Modulating (0-100%)
- Ultra Low Leak Dampers meet California Title 24 requirements and ASHRAE 90.1 2022
- Slip-In Design for Easy Installation
- Standard Barometric Relief Damper
- Single Enthalpy with Dual Enthalpy Upgrade Kit Available
- CO2 Input Sensor Option Available
- Field Assembled Hood Ships with Economizer
- Economizer Ships Complete for Horizontal Duct Application
- Field-Installed Power Exhaust Option Available

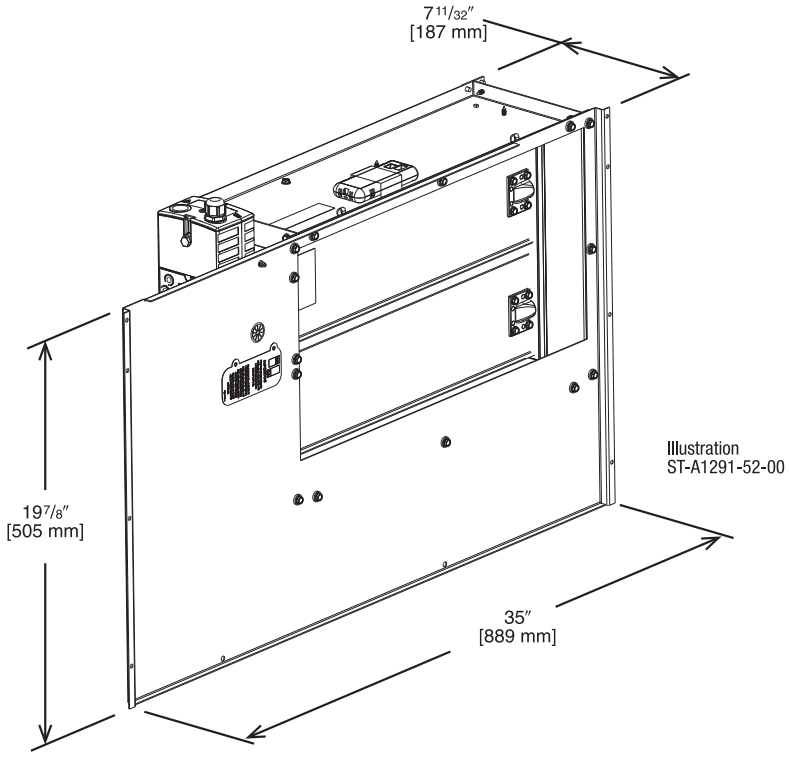

Illustration
ST-A1291-52-00

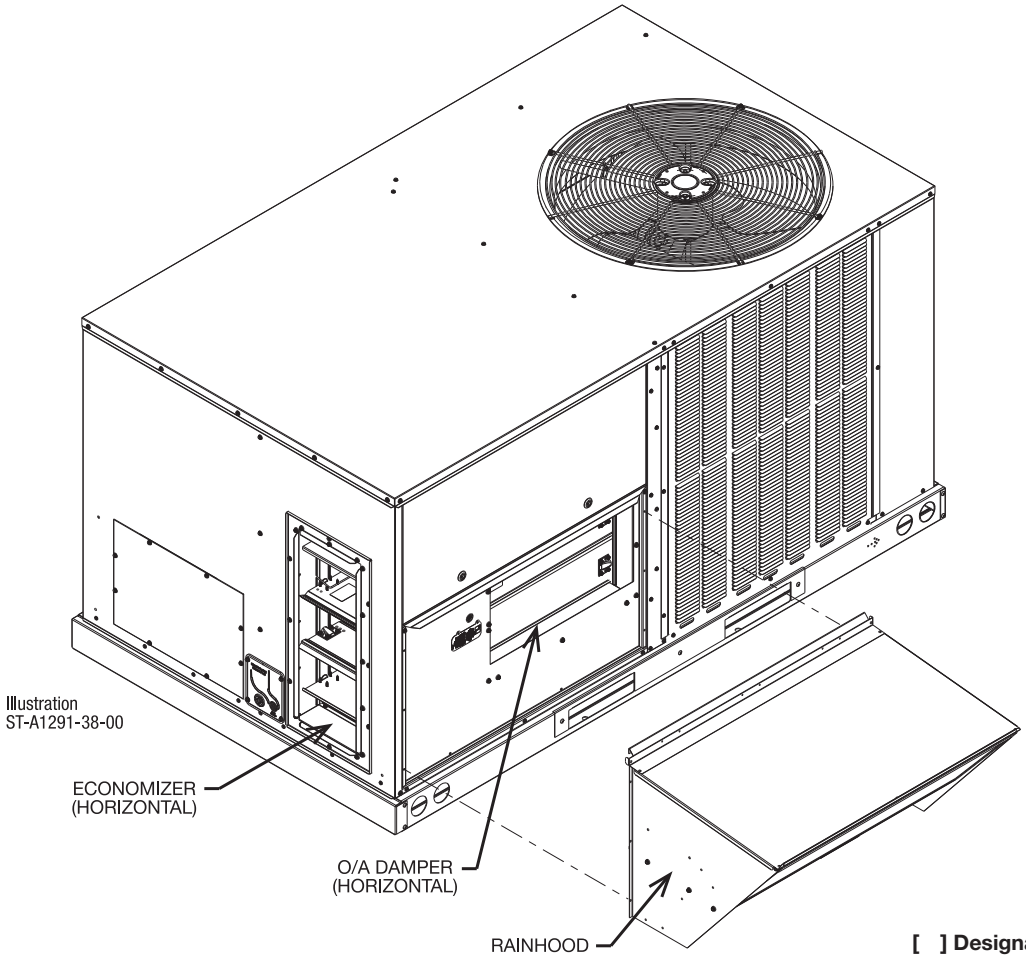

Illustration
ST-A1291-38-00

[ ] Designates Metric Conversions

NON-DDC ECONOMIZER FOR HORIZONTAL DUCT INSTALLATION

Field-Installed Only

RXRD-11MCHAM3—Single Enthalpy (Outdoor)
PD555460—Temperature and Humidity Sensor for Dual Enthalpy (for Siemens Controllers Only)
RXRX-AR02—Wall-mounted CO2 Sensor

- Features **Siemens** Climatix ECO Economizer Controller
- Gear Driven Direct Drive Actuator
- Fully Modulating (0-100%)
- Ultra Low Leak Dampers meet California Title 24 requirements and ASHRAE 90.1 2022
- Slip-In Design for Easy Installation
- Standard Barometric Relief Damper
- Single Enthalpy with Dual Enthalpy Upgrade Kit Available
- CO2 Input Sensor Option Available
- Field Assembled Hood Ships with Economizer
- Economizer Ships Complete for Horizontal Duct Application
- Field-Installed Power Exhaust Option Available

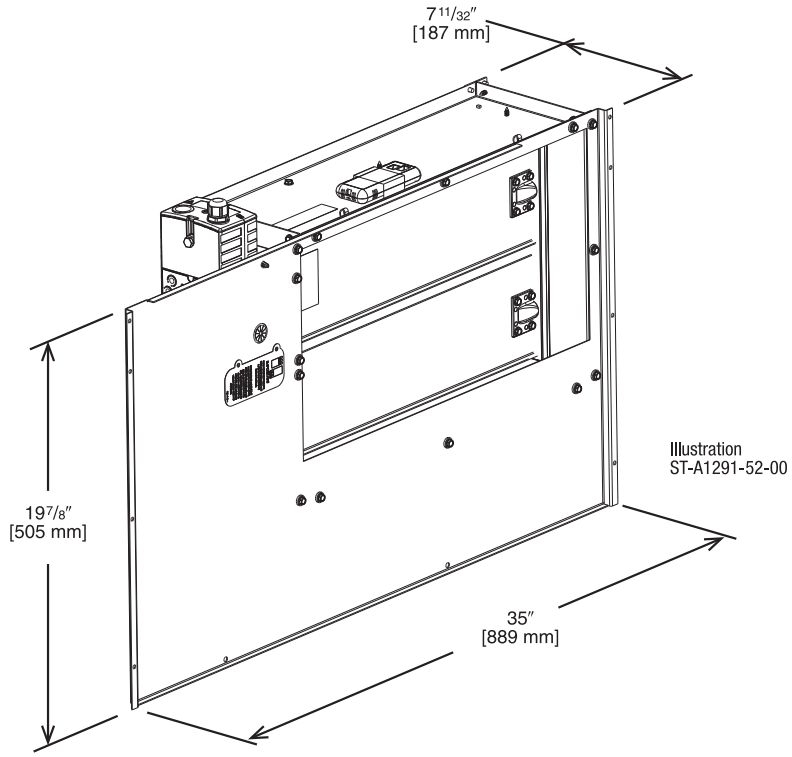

Illustration
ST-A1291-52-00

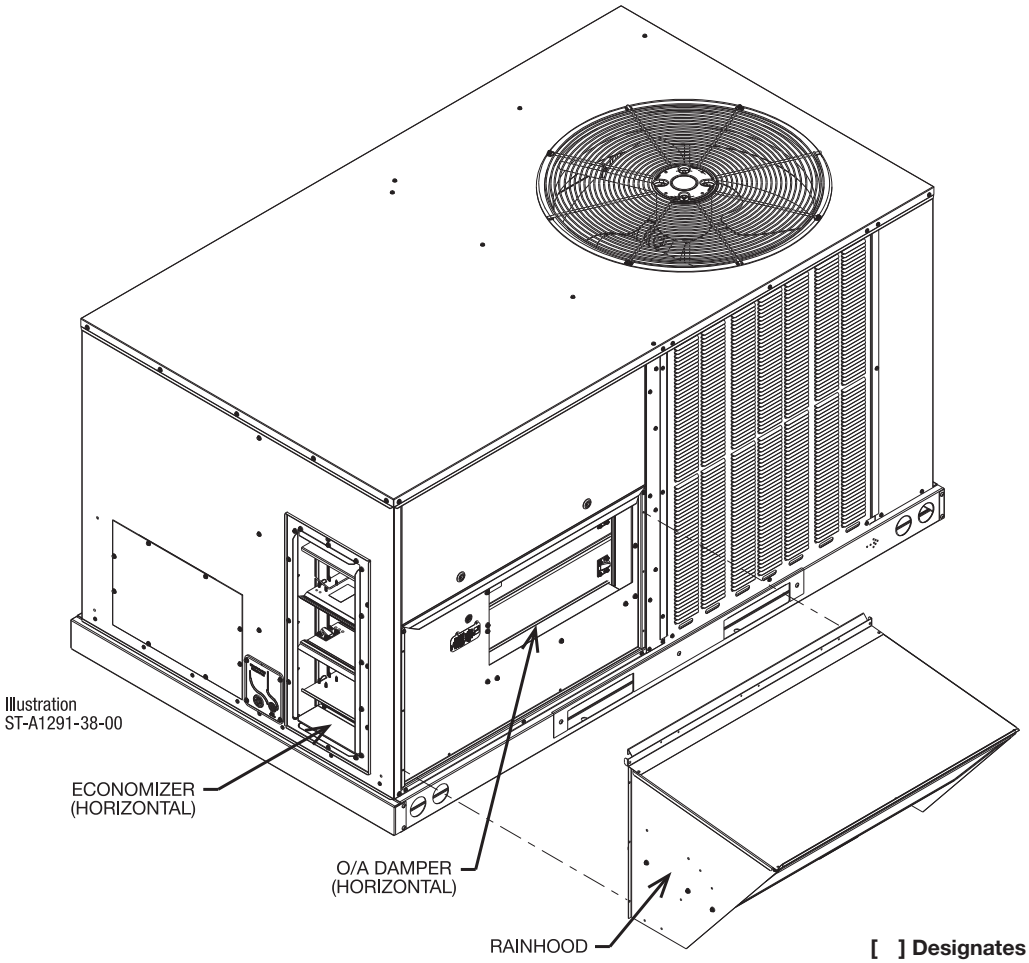

Illustration
ST-A1291-38-00

[ ] Designates Metric Conversions

NON-DDC ECONOMIZER FOR HORIZONTAL DUCT INSTALLATION

Field-Installed Only

RXRD-41MCHAM3—Single Enthalpy (Outdoor)
PD555878—Temperature and Humidity Sensor for Dual Enthalpy (for Ruskin Basic Controller Only)
RXRX-AR02—Wall-mounted CO2 Sensor

These ultra-low leak economizer dampers meet the following minimum construction standards:

1. Frame shall be 14 to 24 gauge galvanized steel channel.
2. Damper blades are galvanized steel airfoil shaped, double skin construction of 14 gauge [2.0] equivalent thickness, 6" [152 mm] wide.
3. Blade edge seals shall be Ruskiprene type or equivalent suitable for -72°F [-60°C] to +275°F [+135°C] mechanically locked into the blade edge. Adhesive or clip-on type seals are unacceptable.
4. Jamb seals shall be flexible metal, compression type to prevent leakage between blade end and damper frame. Blade end overlapping frame is unacceptable.
5. Bearings shall be stainless steel or nylon bushing.
6. Axles shall be hexagonal positively locked into the damper blade.
7. Drive mechanism shall be concealed out of airstream to reduce pressure drop and noise.
8. Economizer damper is tested and rated based upon AMCA Publication 500-D.
9. RRS controls feature the Basic economizer controller with 24v actuator. Controls capable of Economizer Fault Detection and Diagnostics for code compliance.
10. Damper shall meet the leakage requirements of the International Energy Conservation Code by leaking less than 3 cfm/sq. ft. at 1" of static pressure and shall be AMCA licensed as a class 1A damper. Complies with reliability and performance requirements as specified by the California Energy Commission's Title 24 Standard and ASHRAE 90.1. Economizer dampers shall be Ruskin Rooftop Systems ECD60 model.

[ ] Designates Metric Conversions

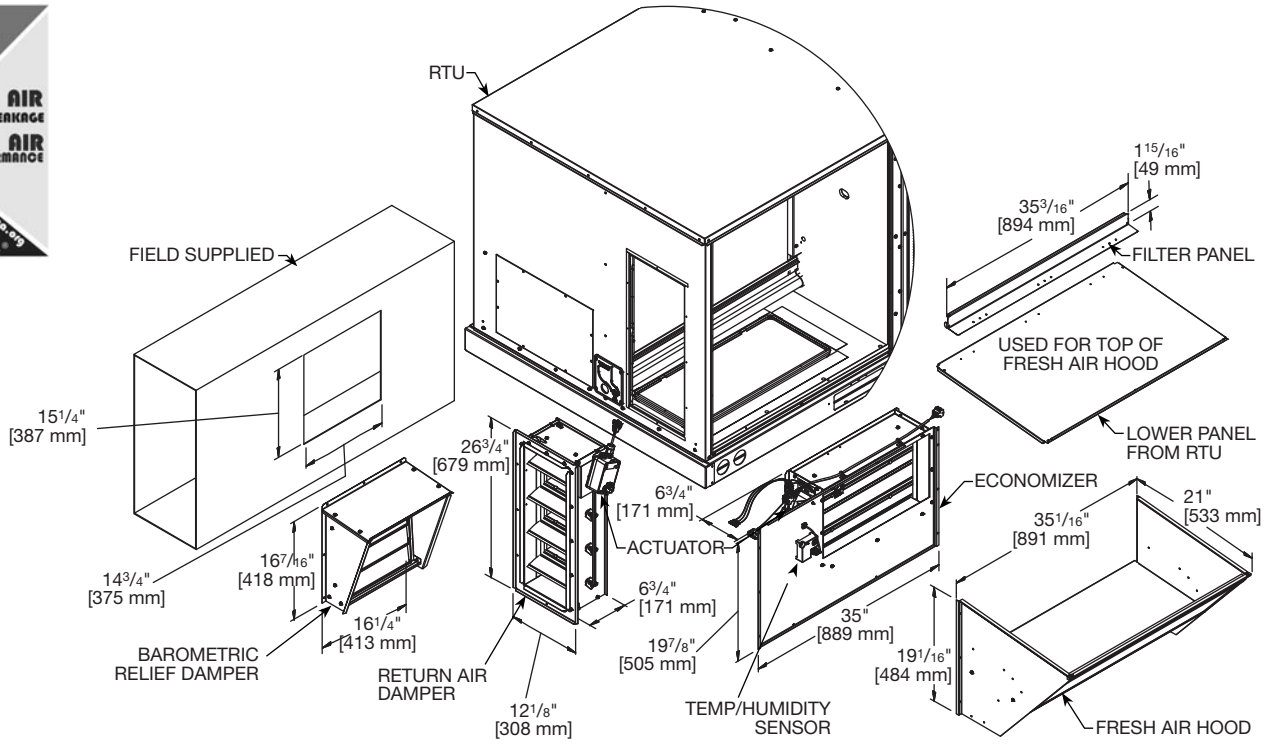

*Components not shown

DDC—ECONOMIZER FOR DOWNFLOW DUCT INSTALLATION

Field-Installed Only

RXRD-01MCDBM3—Single Enthalpy (Outdoor)
RXRX-BV02—Dual Enthalpy Upgrade Kit
RXRX-AR02—Optional Wall-Mounted CO2 Sensor

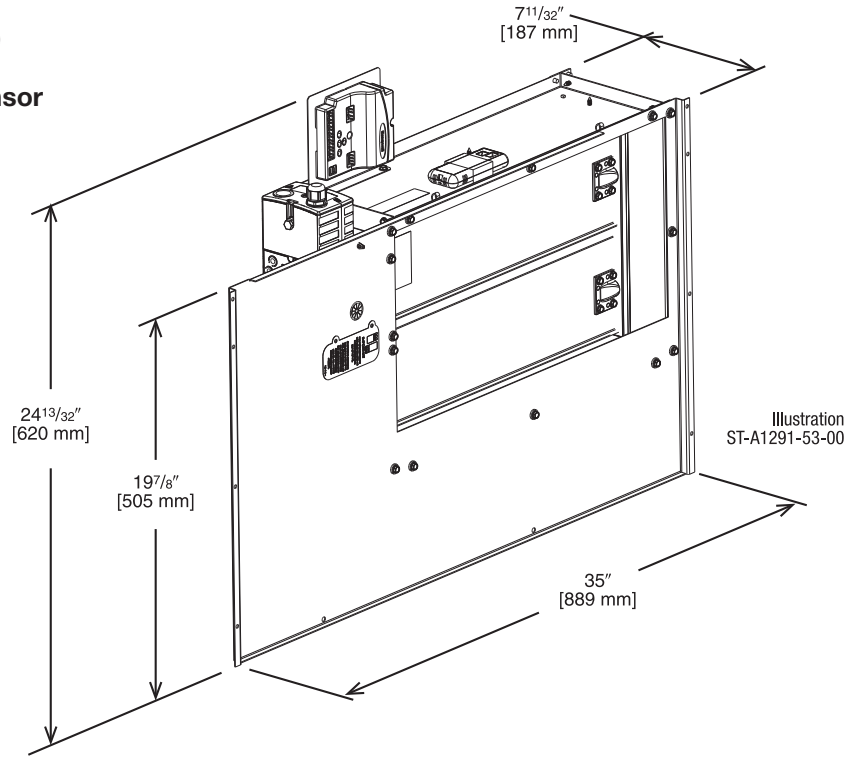

- Features **Honeywell** Controls
- Available Factory-Installed or Field Accessory
- Gear Driven Direct Drive Actuator
- Fully Modulating (0-100%)
- Ultra Low Leak Dampers meet California Title 24 requirements and ASHRAE 90.1 2022
- Slip-In Design for Easy Installation
- Standard Barometric Relief Damper
- Single Enthalpy with Dual Enthalpy Upgrade Kit Available
- CO2 Input Sensor Available
- Field Assembled Hood Ships with Economizer
- Economizer Ships Complete for Downflow Duct Application
- Optional Remote Minimum Position Potentiometer (270 ohm) (Honeywell #S963B1136) is Available from Prostock.
- Field-Installed Power Exhaust Available
- Prewired for Smoke Detector
- If connected to a Building Automation System (BAS), all economizer functions can be viewed on the (BAS), or 16 x 2 LCD screen
- If connected to thermostat, all economizer functions can be viewed on 16 x 2 LCD screen

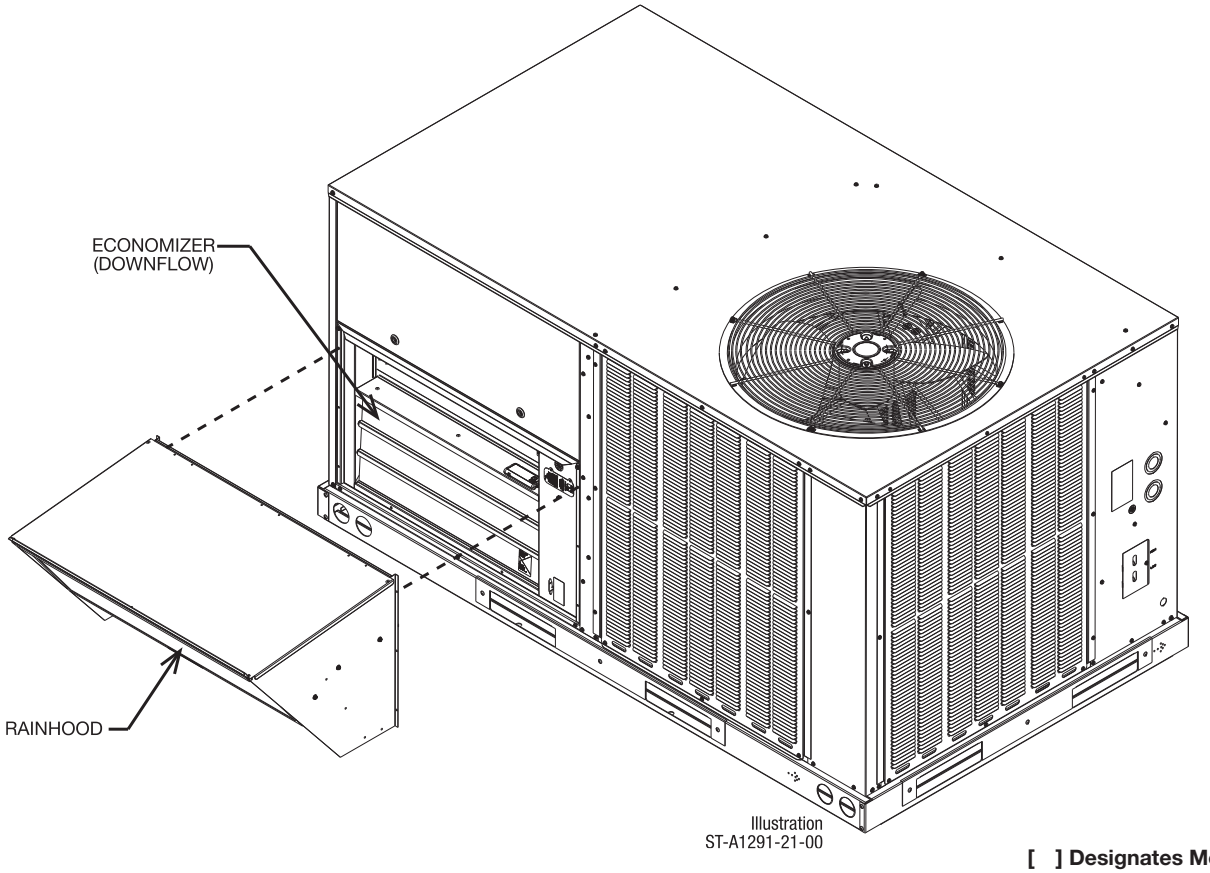

[ ] Designates Metric Conversions

DDC—ECONOMIZER FOR HORIZONTAL DUCT INSTALLATION

Field-Installed Only

RXRD-01MCHBM3—Single Enthalpy (Outdoor)
RXRX-BV02—Dual Enthalpy Upgrade Kit
RXRX-AR02—Wall-mounted CO2 Sensor

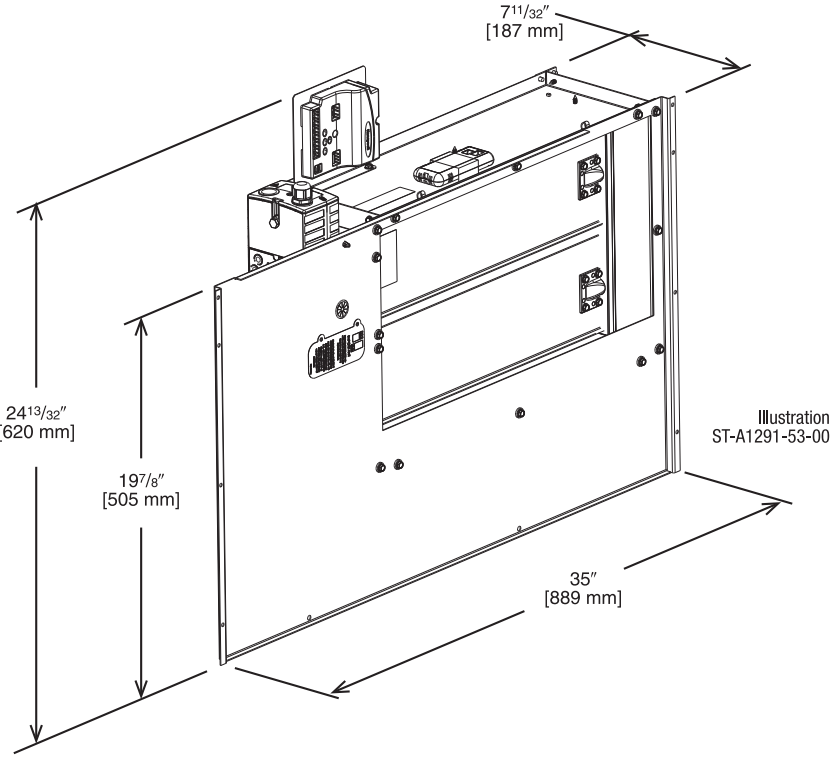

- Features **Honeywell** Controls
- Gear Driven Direct Drive Actuator
- Fully Modulating (0-100%)
- Ultra Low Leak Dampers meet California Title 24 requirements and ASHRAE 90.1 2022
- Slip-In Design for Easy Installation
- Standard Barometric Relief Damper
- Single Enthalpy with Dual Enthalpy Upgrade Kit Available
- CO2 Input Sensor Available
- Field Assembled Hood Ships with Economizer
- Economizer Ships Complete for Horizontal Duct Application
- Optional Remote Minimum Position Potentiometer (270 ohm) (Honeywell #S963B1136) is Available from Prostock
- Field-Installed Power Exhaust Available
- If connected to a Building Automation System (BAS), all economizer functions can be viewed on the (BAS), or 16 x 2 LCD screen
- If connected to a thermostat, all economizer functions can be viewed on 16 x 2 LCD screen

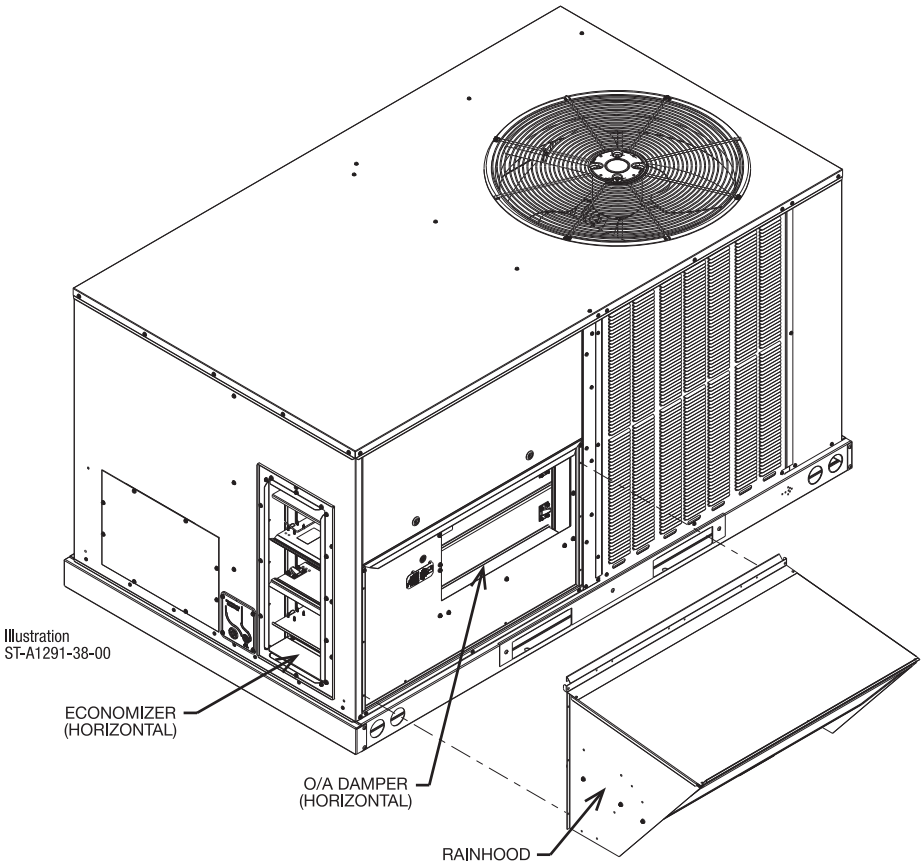

[ ] Designates Metric Conversions

POWER EXHAUST KIT

RXRX-CCF02 (C or D*)

***Voltage Code**

VERTICAL AIRFLOW

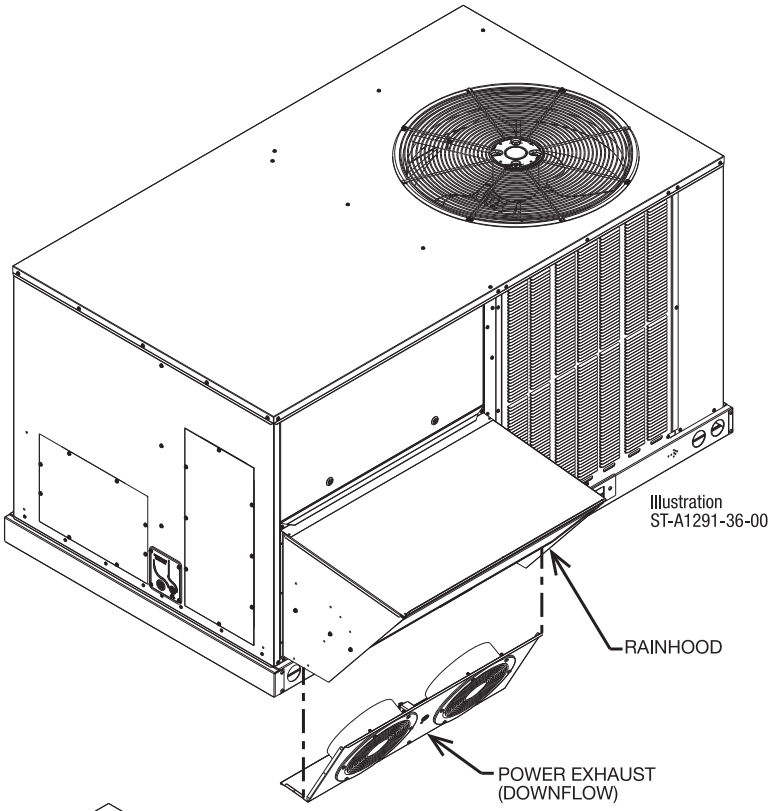

HORIZONTAL AIRFLOW

RXRX-CCF03 (C or D*)

***Voltage Code**

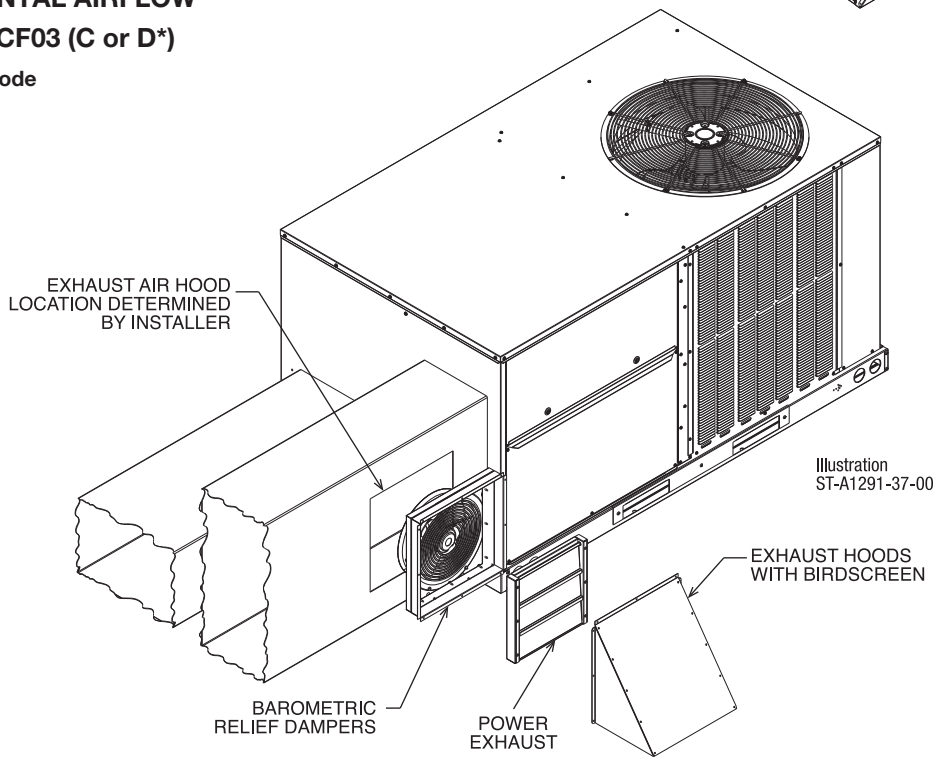

Model No.	No. of Fans	Volts	Phase	HP (ea.)	CFM [L/s]*	RPM	FLA (ea.)	LRA (ea.)
RXRX-CCF0*C	2	208-230	1	0.47	2200	3000	1.55	1.1
RXRX-CCF0*D	2	460	3	0.40	1970	2750	0.51	1.9

POWER EXHAUST KIT FOR VERTICAL APPLICATIONS

RXRX-RCF02*

***Voltage Code: C or D**

- Shipped completely assembled
- All wiring from control box to economizer is supplied
- Fully insulated with 1" 1.5 lb. fiberglass insulation
- Motors are factory wired and tested
- **Economizer Sold Separately**

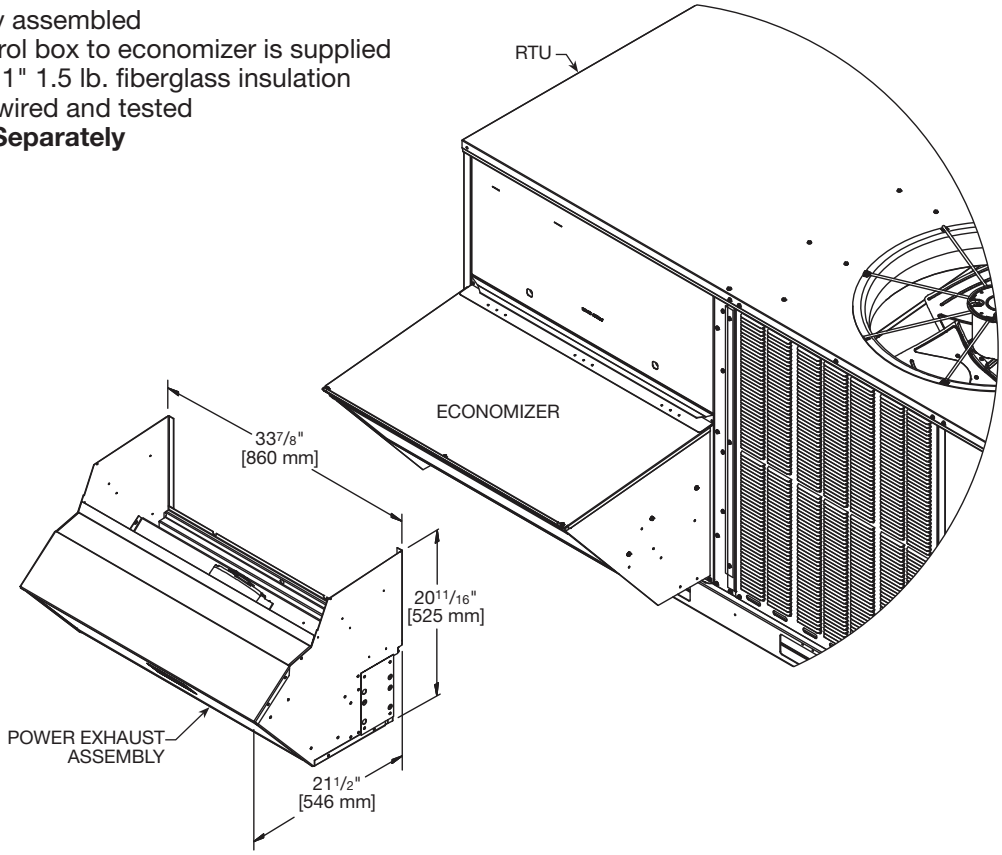

[ ] Designates Metric Conversions

Model No.	Volt	Phase	Motor				Unit				@ 0.1 CFM
			HP	RPM	LRA	Qty.	Cir. Qty.	FLA	MCA	Fuse Size	
RXRX-RCF02C	208-230	1	1/2	1625	5.86	1	1	2.70	3.38	6	1989
RXRX-RCF02D	460				3.33			1.34	1.68	3	

POWER EXHAUST KIT FOR HORIZONTAL APPLICATIONS

RXRX-RCF03*

***Voltage Code: C or D**

- Shipped completely assembled
- All wiring from control box to economizer is supplied
- Fully insulated with 1" 1.5 lb. fiberglass insulation
- Motors are factory wired and tested
- **Economizer with Relief Hood Sold Separately**

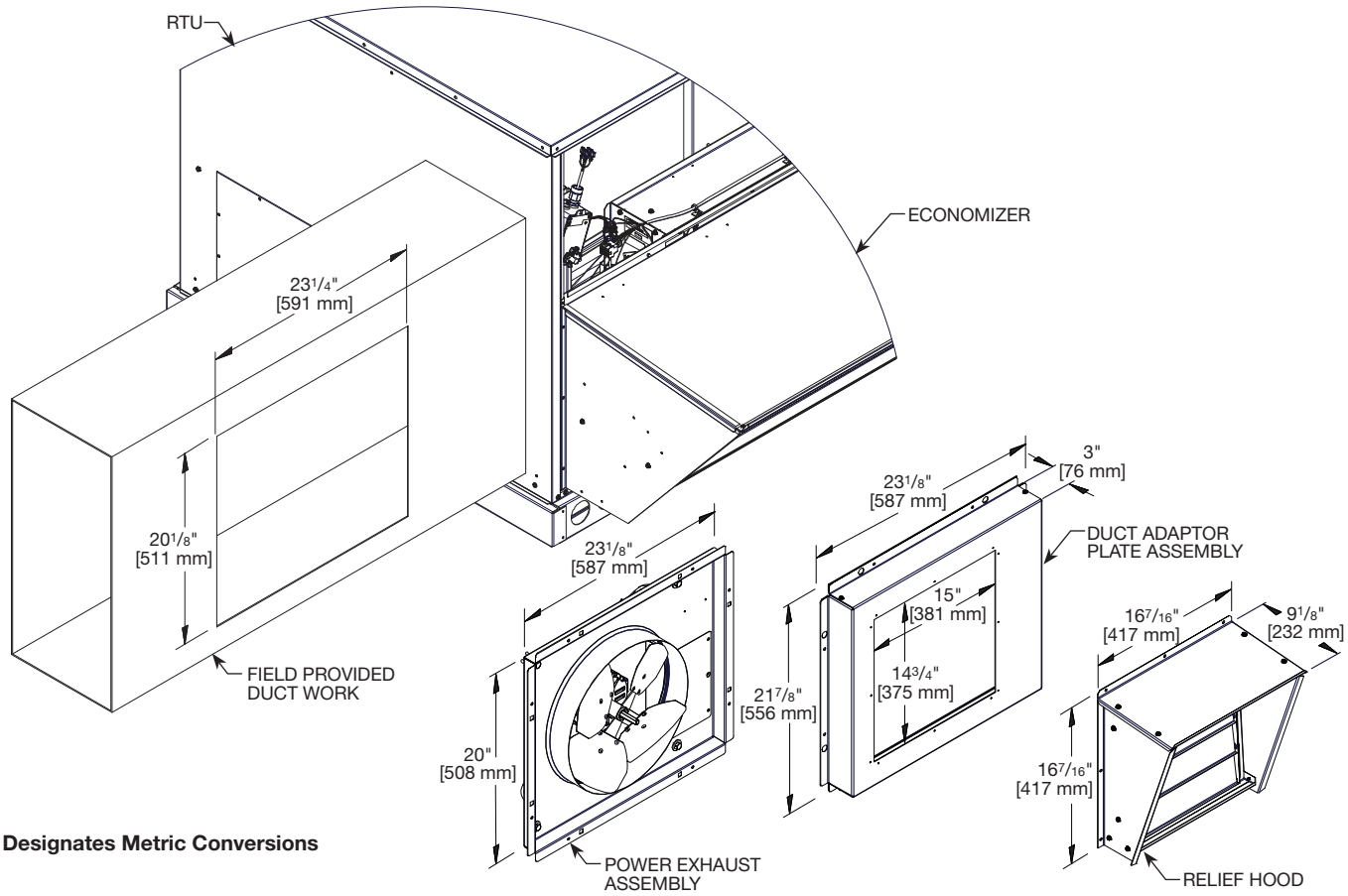

[ ] Designates Metric Conversions

Model No.	RSI Model No.	Volt	Phase	Motor				Unit				@ 0.1 CFM
				HP	RPM	LRA	Qty.	Cir. Qty.	FLA	MCA	Fuse Size	
RXRX-RCF03C	58-470-30-21	208/230	1	1/2	1625	5.86	1	1	2.70	3.38	6	2013
RXRX-RCF03D	58-470-30-31	460				3.33			1.34	1.68	3	

NOTE: Example: 58-470-30-21 (For 208/230 volt 1 phase motor).

FRESH AIR DAMPER

MOTORIZED DAMPER KIT
RXRF-ACB1

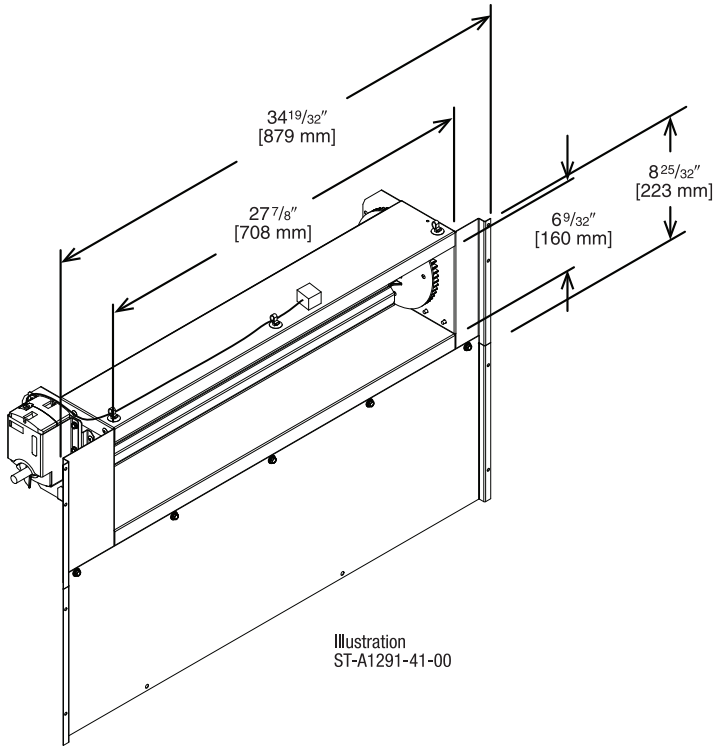

Illustration
ST-A1291-41-00

[ ] Designates Metric Conversions

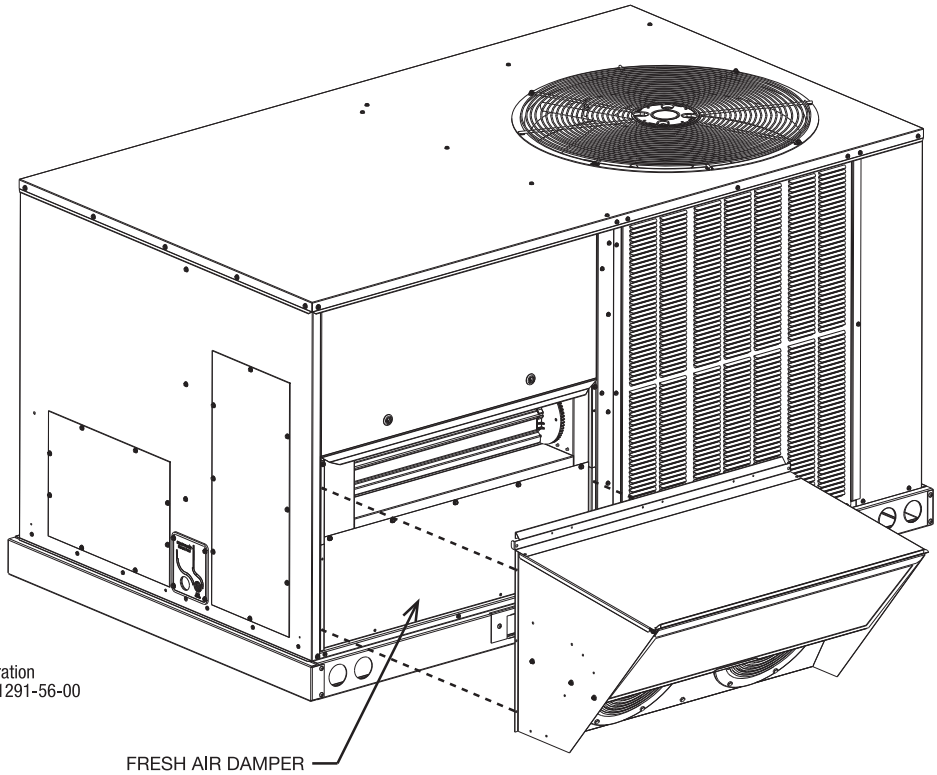

Illustration
ST-A1291-56-00

- Features **Siemens** Actuator
- Gear Driven Direct Drive Actuator
- Adjustable to 2 positions
- Slip-In Design for Easy Installation
- Plug-In Polarized 12-pin and 4-pin Electrical Connections
- Pre-Configured—No Field Adjustments Necessary

FRESH AIR DAMPER

MANUAL DAMPER KIT
RXRF-ACA1

DOWNFLOW APPLICATION

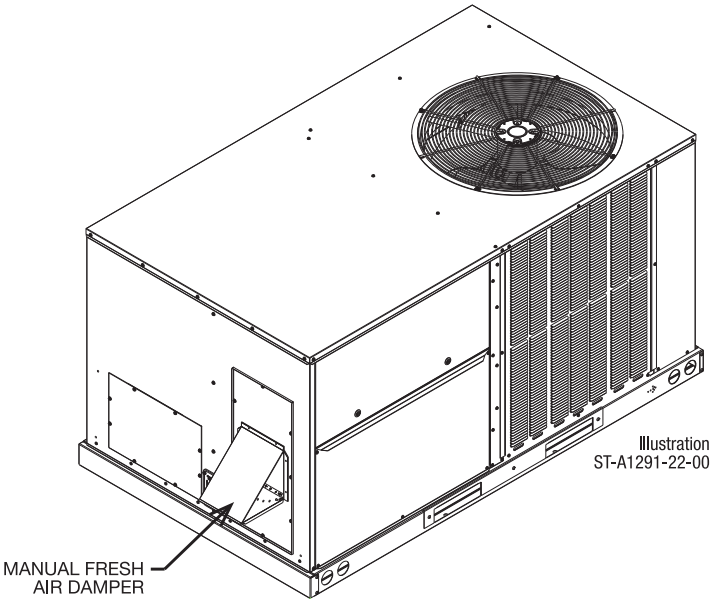

Illustration
ST-A1291-22-00

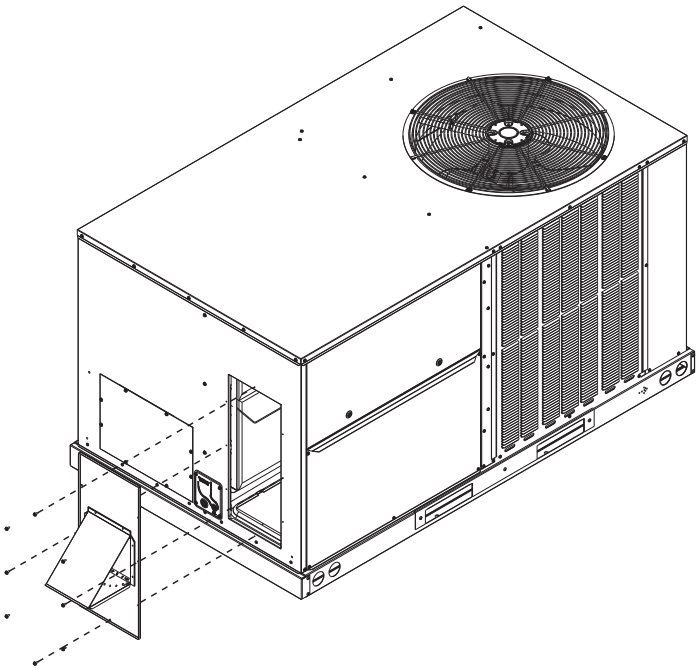

HORIZONTAL APPLICATION

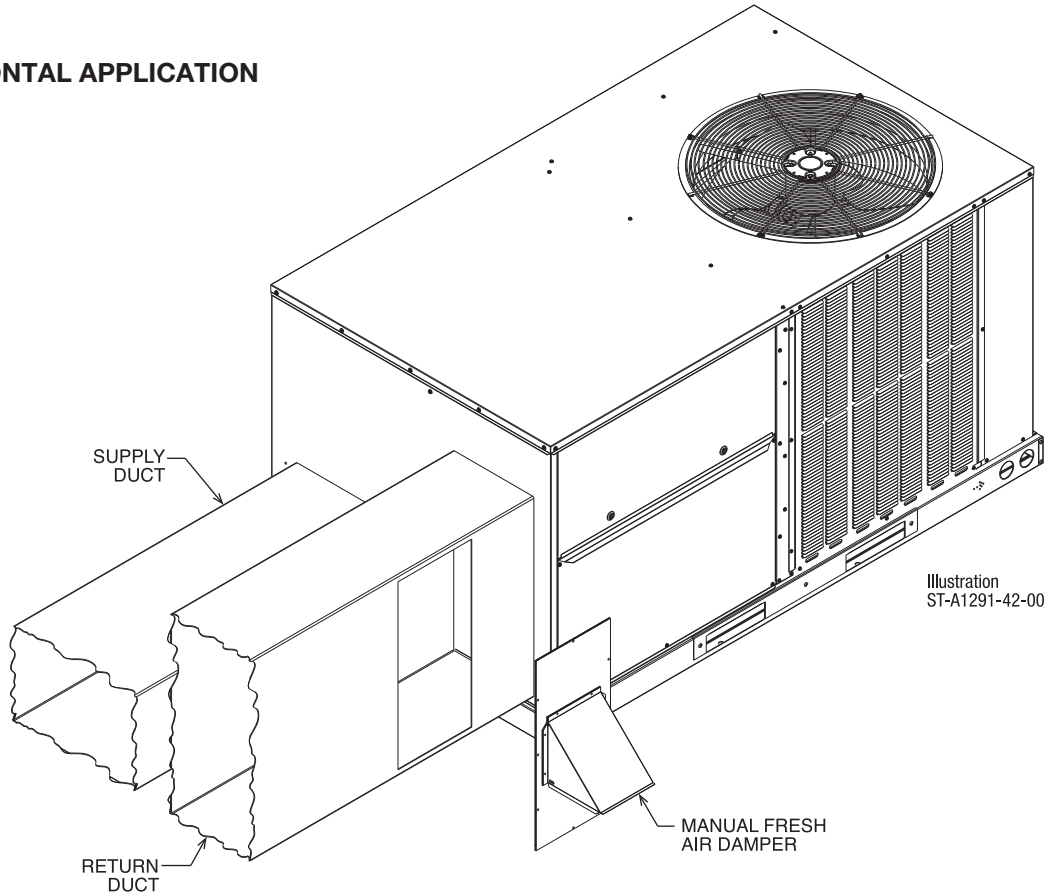

Illustration
ST-A1291-42-00

ROOFCURBS (Full Perimeter)

- Rheem's roofcurb design can be utilized on all 3-6 ton [10.6-17.6 kW] RHPC- models
- Two available heights (14" [356 mm] and 24" [610 mm]) for ALL models
- Quick assembly corners for simple and fast assembly
- Opening provided in bottom pan to match the "Thru the Curb" electrical, gas piping, condensate, connection opening provided on the unit base pan
- 1" [25 mm] x 4" [102 mm] Nailer provided
- Sealing gasket (40' [12.2 m]) provided with Roofcurb
- Packaged for easy field assembly

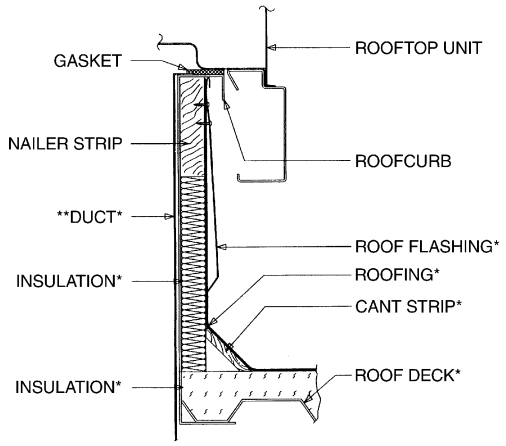

*BY CONTRACTOR

**FOR INSTALLATION OF DUCT AS SHOWN, USE RECOMMENDED DUCT SIZES FROM ROOFCURB INSTALLATION INSTRUCTIONS. FOR DUCT FLANGE ATTACHMENT TO UNIT, SEE UNIT INSTALLATION INSTRUCTIONS FOR RECOMMENDED DUCT SIZES.

Illustration
ST-A0743-02

View	Roofcurb Model	Height of Curb
A	RXKG-DCC14	14" [356 mm]
A	RXKG-DCC24	24" [610 mm]

ROOFCURB INSTALLATION

View	Roofcurb Model	Dimensions
B	RXKG-DC14	74.875" x 40.688" x 14.0"
B	RXKG-DC24	74.875" x 40.688" x 24.0"

VIEW A

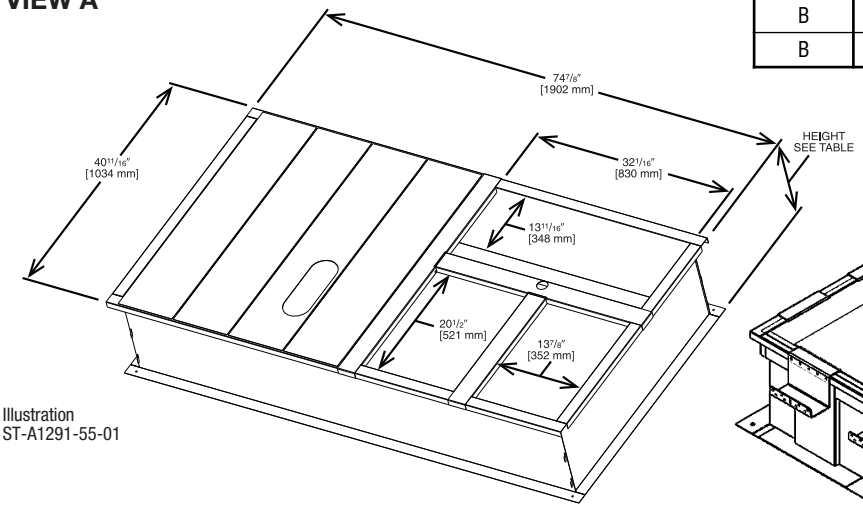

Illustration
ST-A1291-55-01

WELDED ROOFCURB VIEW B

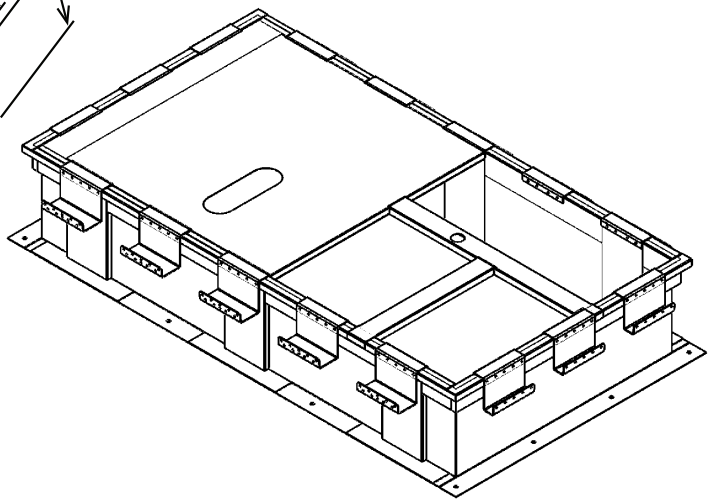

- State of Florida Approved: Approval Number FL 26981 for Technical Evaluation Report TER-20-28788 certifies the HVAC Unit and mounting methods for high wind resistance are compliant per Florida Building Code.

[ ] Designates Metric Conversions

ROOFCURB ADAPTERS (CON'T.)

RXRX-DCCAE

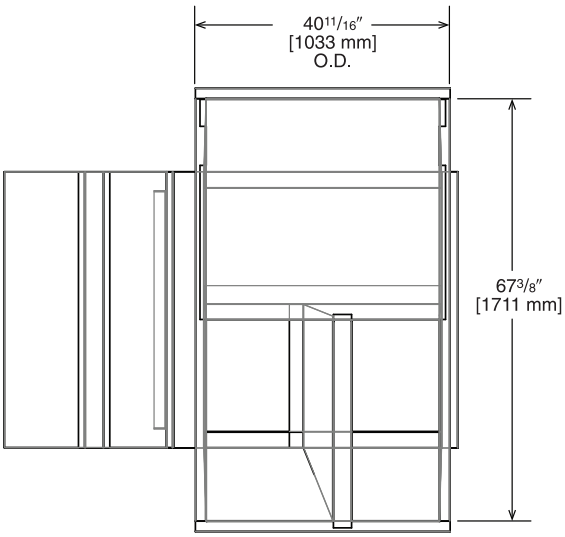

Approximate Static Pressure Drop
@1200 CFM = 0.05" w.g.
@2000 CFM = 0.19" w.g.

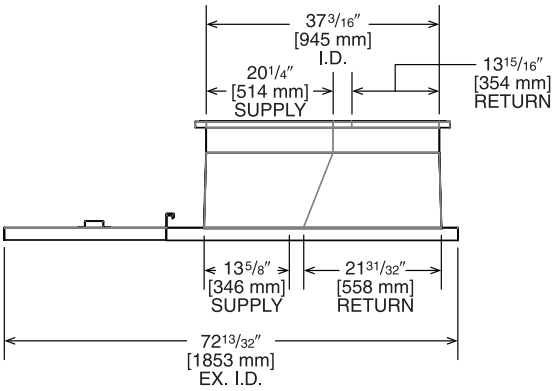

Illustration
ST-A1291-44-00

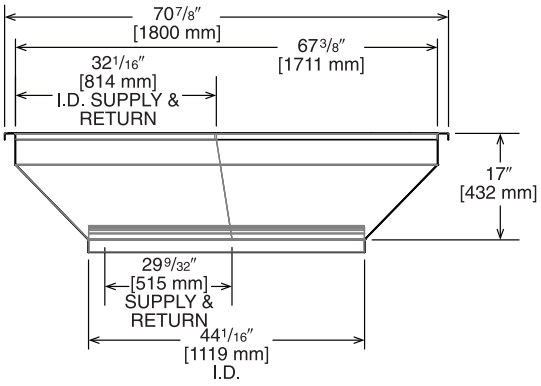

TOP VIEW

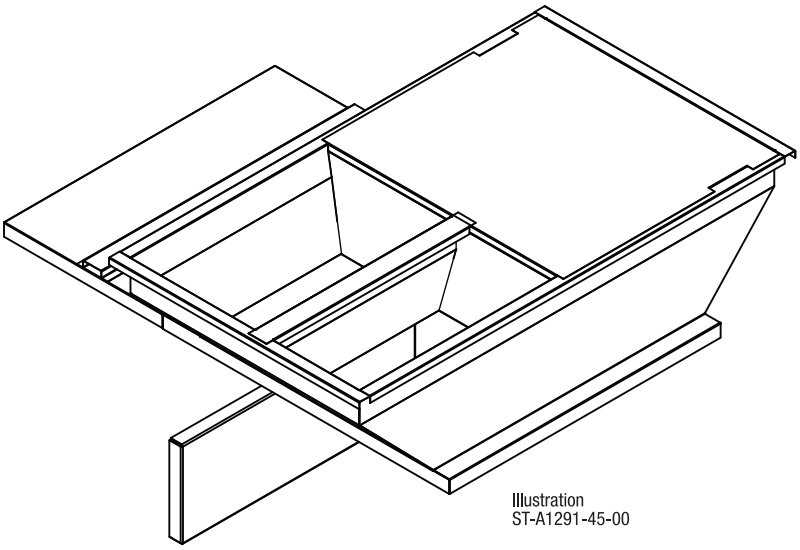

Illustration
ST-A1291-45-00

[ ] Designates Metric Conversions

CONCENTRIC DIFFUSER APPLICATION

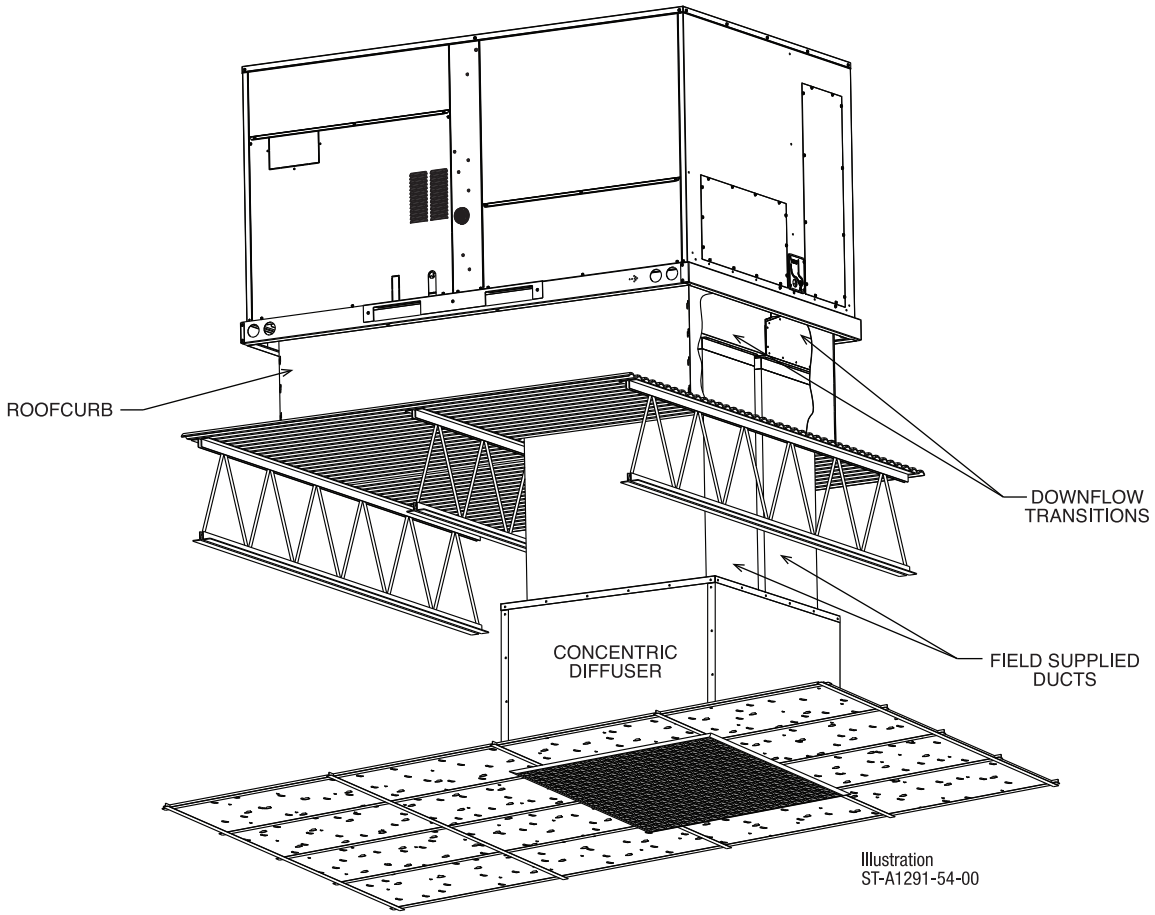

Illustration
ST-A1291-54-00

DOWNFLOW TRANSITION DRAWINGS

RXMC-DC01 Concentric Adapter 3-4 Ton [10.6 and 14.1 kW] Drop

- Used with AEF1800 or AED1800 Concentric Diffusers.

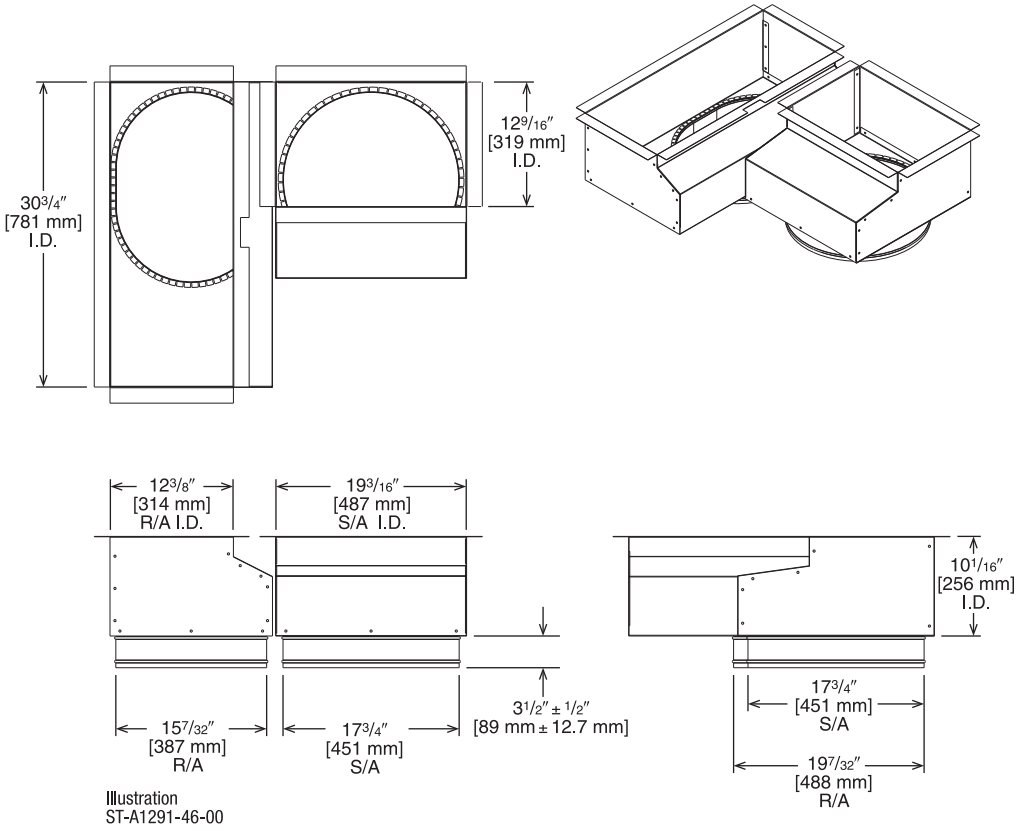

Illustration
ST-A1291-46-00

[ ] Designates Metric Conversions

CONCENTRIC DIFFUSER—STEP DOWN

RXRN-AED1800 (3 and 4 Ton [10.6 and 14.1 kW] Models)

For Use With Downflow Transition (RXMC-DC01) and 18" [457 mm] Round Supply and Return Ducts

- All aluminum diffuser with aluminum return air eggcrate
- Built-in anti-sweat gasket
- Molded fiberglass supports
- Built-in hanging supports
- Diffuser box constructed of sheet metal insulated with 1" [25.4 mm] 1.5 lbs. [.7 kg] duct liner

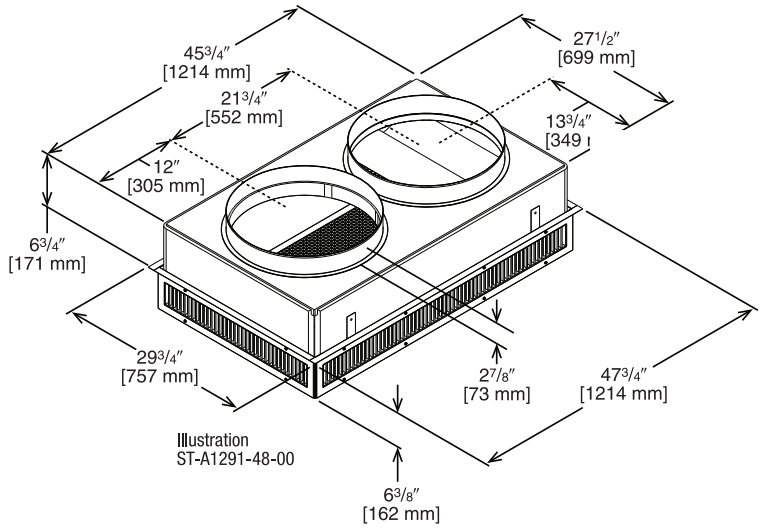

Illustration
ST-A1291-48-00

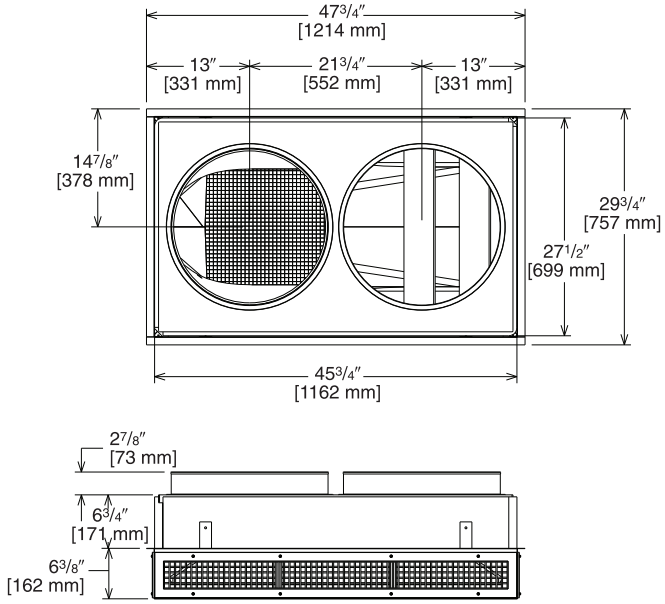

ENGINEERING DATA①

Model No.	Flow Rate CFM [L/s]	Throw ② ③ Feet [m]	Neck Velocity fpm [m/s]	Noise Level ④ (dbA)
RXRN-AED1800	1000 [472]	9-23 [2.7-7.0]	391 [2.0]	12
	1200 [566]	10-24 [3.0-7.3]	469 [2.4]	15
	1400 [661]	12-26 [3.7-7.9]	547 [2.8]	19
	1600 [755]	13-28 [4.0-8.5]	625 [3.2]	21
	1800 [849]	15-30 [4.6-9.1]	703 [3.6]	26
	2000 [944]	17-32 [5.2-9.8]	781 [4.0]	30
	2400 [1133]	19-34 [5.8-10.4]	859 [5.8]	32

NOTES: ① All data is based on the air diffusion council guidelines.
② Throw data is based on 75 FPM Terminal Velocities using isothermal air.
③ Throw is based on diffuser blades being directed in a straight pattern.
④ Actual noise levels may vary due to duct design and do not include transmitted unit noise. Adequate duct attenuation must be provided to reduce sound output from the unit.

[ ] Designates Metric Conversions

FLUSH MOUNT CONCENTRIC DIFFUSER—FLUSH

RXRN-AEF1800 (3 and 4 Ton [10.6 and 14.1 kW])

For Use With Downflow Transition (RXMC-DC01)
18" [457 mm] Round Supply and Return Ducts

- All aluminum diffuser with aluminum return air eggcrate
- Built-in anti-sweat gasket
- Molded fiberglass supports
- Built-in hanging supports
- Diffuser box constructed of sheet metal insulated with 1" [25.4 mm] 1.5 lbs. [.7 kg] duct liner

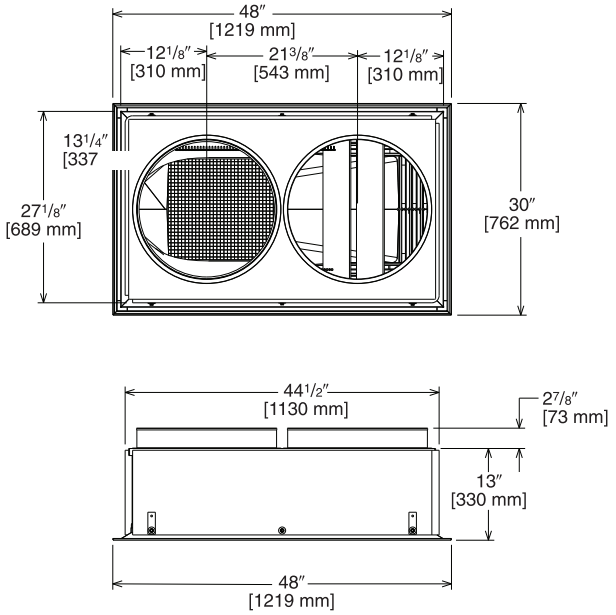

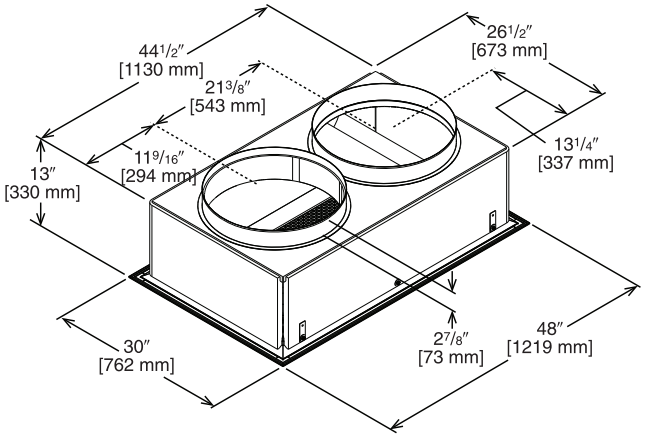

Illustration
ST-A1291-49-00

ENGINEERING DATA①

Model No.	Flow Rate CFM [L/s]	Throw ② ③ Feet [m]	Neck Velocity fpm [m/s]	Noise Level ④ (dbA)
RXRN-AEF1800	1000 [472]	9-12 [2.7-3.7]	663 [3.4]	20
	1200 [566]	12-16 [3.7-4.9]	714 [3.6]	25
	1400 [661]	15-20 [4.6-6.1]	765 [3.9]	30
	1600 [755]	17-23 [5.2-7]	816 [4.1]	30
	1800 [849]	20-26 [6.1-7.9]	867 [4.4]	35
	2000 [944]	22-29 [6.7-8.8]	918 [4.7]	40
	2400 [1133]	25-32 [7.6-9.8]	969 [4.9]	45

NOTES: ① All data is based on the air diffusion council guidelines.
② Throw data is based on 75 FPM Terminal Velocities using isothermal air.
③ Throw is based on diffuser blades being directed in a straight pattern.
④ Actual noise levels may vary due to duct design and do not include transmitted unit noise. Adequate duct attenuation must be provided to reduce sound output from the unit.

[ ] Designates Metric Conversions

DOWNFLOW TRANSITION DRAWINGS

RXMC-DC02 Concentric Adapter 5-6 Ton [17.6 and 21.1 kW] Drop

- Used with AEF2000 or AED2000 Concentric Diffusers

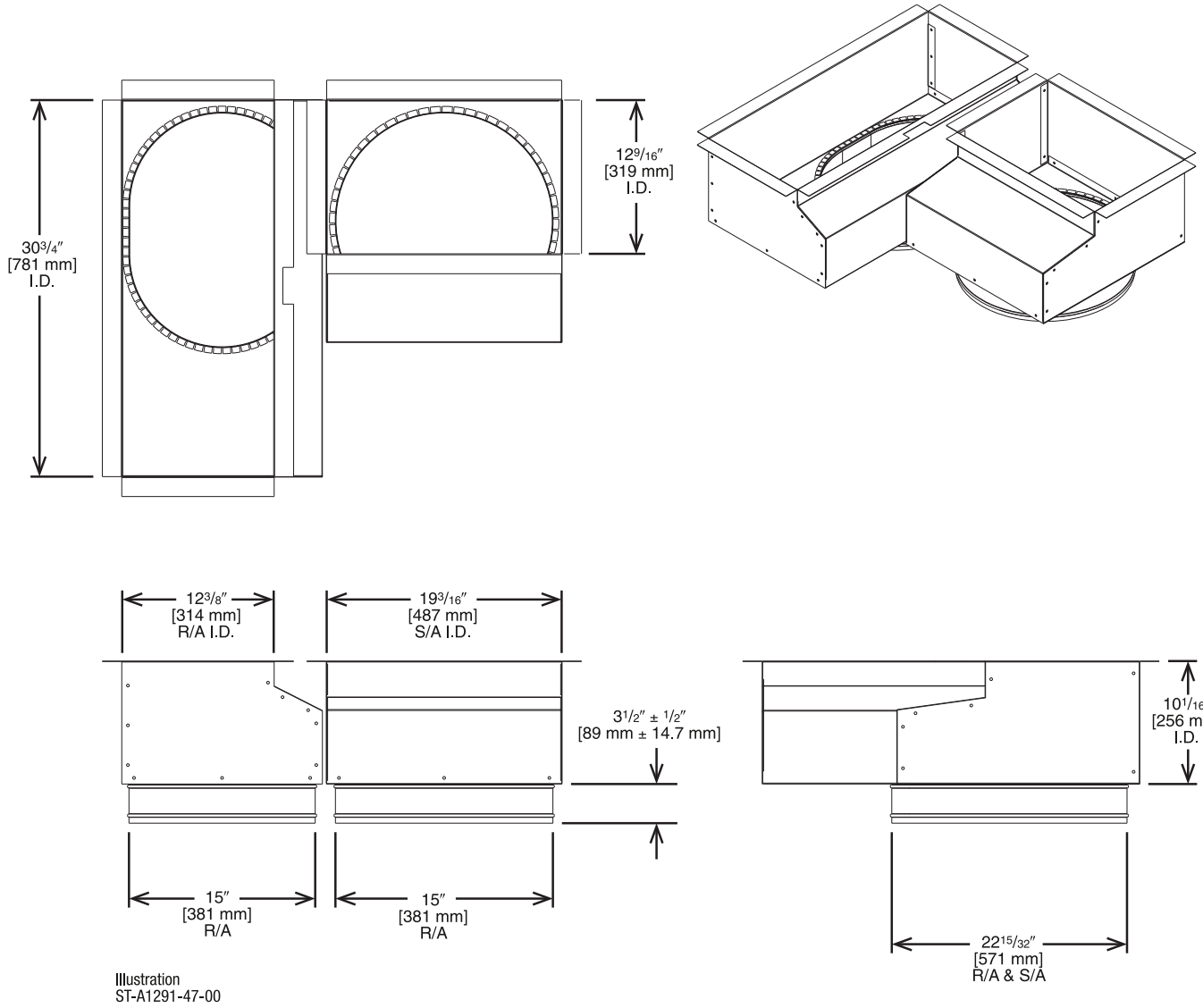

Illustration
ST-A1291-47-00

[ ] Designates Metric Conversions

CONCENTRIC DIFFUSER—STEP DOWN

RXRN-AED2000 (5 Ton [17.6 kW] Models)

For Use With Downflow Transition (RXMC-DC02) and 20" [508 mm] Round Supply and Return Ducts

- All aluminum diffuser with aluminum return air eggcrate
- Built-in anti-sweat gasket
- Molded fiberglass supports
- Built-in hanging supports
- Diffuser box constructed of sheet metal insulated with 1" [25.4 mm] 1.5 lbs. [.7 kg] duct liner

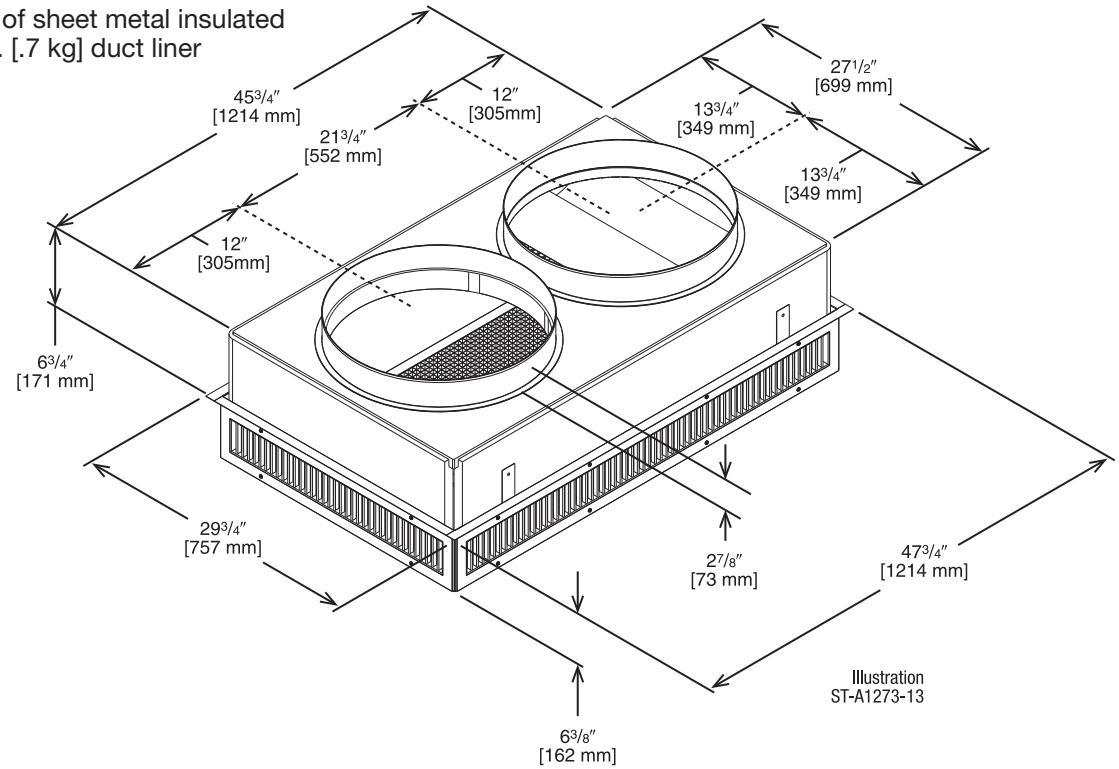

ENGINEERING DATA①

Model No.	Flow Rate CFM [L/s]	Throw ② ③ Feet [m]	Neck Velocity fpm [m/s]	Noise Level ④ (dbA)
RXRN-AED2000	2600 [1222]	22-39 [6.7-11.9]	669 [3.4]	32
	2800 [1316]	23-40 [7.1-12.2]	720 [3.7]	38
	3000 [1410]	25-42 [7.6-12.8]	772 [3.9]	40
	3200 [1504]	26-43 [7.9-13.1]	823 [4.2]	41
	3400 [1598]	27-45 [8.2-13.7]	874 [4.4]	42

NOTES: ① All data is based on the air diffusion council guidelines.
② Throw data is based on 75 FPM Terminal Velocities using isothermal air.
③ Throw is based on diffuser blades being directed in a straight pattern.
④ Actual noise levels may vary due to duct design and do not include transmitted unit noise. Adequate duct attenuation must be provided to reduce sound output from the unit.

[ ] Designates Metric Conversions

FLUSH MOUNT CONCENTRIC DIFFUSER—FLUSH

RXRN-AEF2000 (5 Ton [17.6 kW])

For Use With Downflow Transition (RXMC-DC02)
20" [508 mm] Round Supply and Return Ducts

- All aluminum diffuser with aluminum return air eggcrate
- Built-in anti-sweat gasket
- Molded fiberglass supports
- Built-in hanging supports
- Diffuser box constructed of sheet metal insulated with 1" [25.4 mm] 1.5 lbs. [.7 kg] duct liner

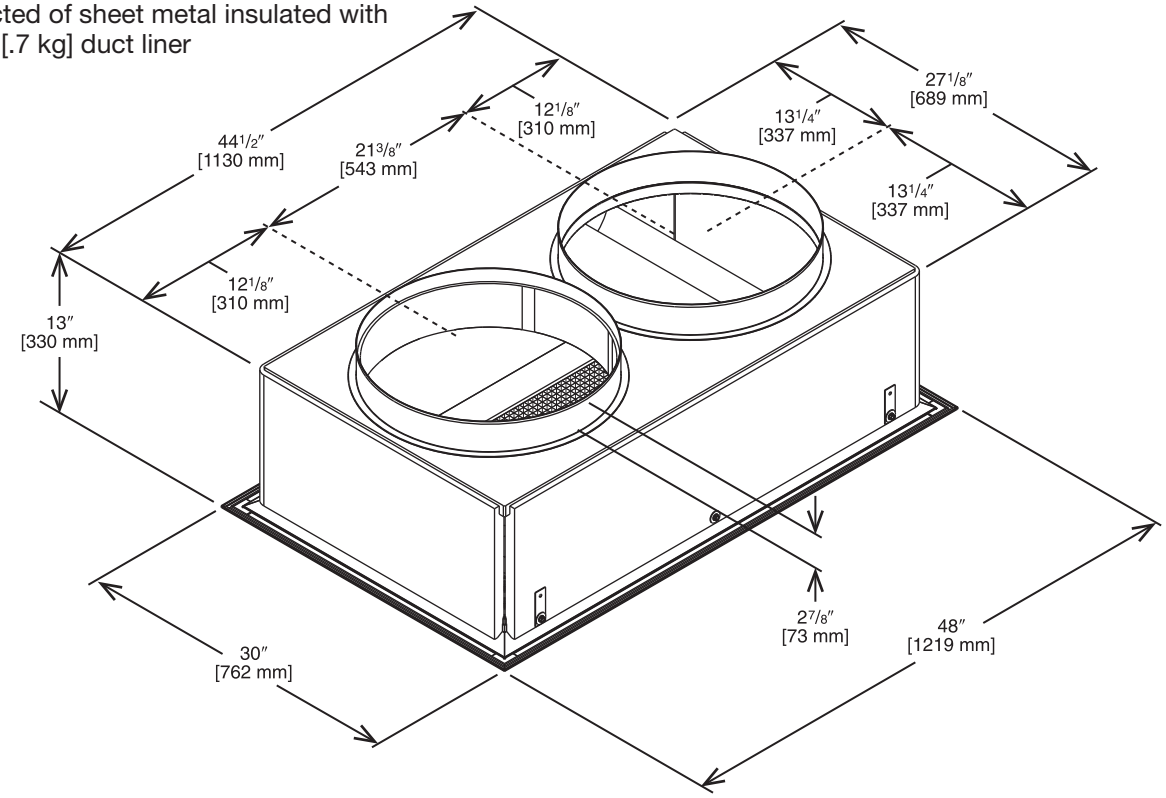

Illustration
ST-A1273-14-00

ENGINEERING DATA①

Model No.	Flow Rate CFM [L/s]	Throw ② ③ Feet [m]	Neck Velocity fpm [m/s]	Noise Level ④ (dbA)
RXRN-AEF2000	2600 [1222]	17-24 [5.2-7.3]	663 [3.4]	30
	2800 [1316]	18-28 [5.5-8.5]	714 [3.6]	35
	3000 [1410]	20-30 [6.1-9.1]	765 [3.9]	35
	3200 [1504]	22-33 [6.7-10.1]	816 [4.1]	40
	3400 [1598]	23-37 [7-11.3]	867 [4.4]	40

NOTES: ① All data is based on the air diffusion council guidelines.
② Throw data is based on 75 FPM Terminal Velocities using isothermal air.
③ Throw is based on diffuser blades being directed in a straight pattern.
④ Actual noise levels may vary due to duct design and do not include transmitted unit noise. Adequate duct attenuation must be provided to reduce sound output from the unit.

[ ] Designates Metric Conversions

Guide Specifications RHPC-036— 072

You may copy this document directly into your building specification. This specification is written to comply with the 2016 version of the “master format” as published by the Construction Specification Institute. www.csinet.org.

ELECTRIC HEAT PACKAGED ROOFTOP

HVAC Guide Specifications

Size Range: 3 to 6 Nominal Tons

1.00 General

A. Outdoor, rooftop mounted, electrically controlled, heating and cooling unit utilizing a(n) hermetic scroll compressor(s) for cooling duty and heat pump for heating duty.

B. Factory assembled, single-piece heating and cooling rooftop unit. Contained within the unit enclosure shall be all factory wiring, piping, controls, and special features required prior to field start-up.

C. Unit shall use environmentally safe, R-454B refrigerant.

D. Unit shall be installed in accordance with the manufacturer’s instructions.

E. Unit must be selected and installed in compliance with local, state, and federal codes.

F. Model and serial data shall be printed inside the control box.

1.01 Quality Assurance

A. Unit meets ASHRAE 90.1 2022 minimum efficiency requirements.

B. Unit shall be rated in accordance with AHRI Standards 210/240 or 340/360 and 10 CFR appendix M1 to subpart B or part 430.

C. Unit shall be designed to conform to ASHRAE 15.

D. Unit shall be UL-tested and certified in accordance with Standards and UL-listed and certified under Canadian standards as a total package for safety requirements.

E. Insulation and adhesive shall meet NFPA 90A requirements for flame spread and smoke generation.

F. Unit casing shall be capable of withstanding 1000-hour salt spray exposure per ASTM B117 (scribed specimen).

G. Roof curb shall be designed to conform to NRCA Standards.

H. Unit shall be subjected to a completely automated run test on the assembly line. The data for each unit will be stored at the factory and must be available upon request.

I. Unit shall be designed in accordance with UL Standard 60335-2-40 4th Edition. including tested to withstand rain.

1.02 Manufacturer Qualifications

A. Unit shall be designed in accordance with ISO 9001:2015 and shall be manufactured in a facility registered by ISO 9001:2015.

1.03 Installer Qualifications

A. The installer shall be trained to install and service equipment with A2L refrigerants.

1.04 Delivery, Storage, and Handling

A. Unit shall be stored and handled per manufacturer’s recommendations.

B. Lifted by crane requires either shipping top panel or spreader bars.

C. Unit shall only be stored or positioned in the upright position.

1.05 Unit Cabinet

A. Unit cabinet shall be constructed of galvanized steel.

B. Unit cabinet exterior paint shall be: pre-painted steel.

C. The sheet-metal cabinet shall be constructed of 18-gauge material for structural components with an underlying coat of G90.

D. Evaporator fan compartment interior cabinet insulation shall conform to AHRI Standards 210 or 360 minimum exterior sweat criteria. Interior surfaces shall be insulated with a minimum 1/2-in. thick, 1.6 lb density, flexible fiberglass insulation, foil faced on the air side. Aluminum foil-faced fiberglass insulation shall be used in the gas heat compartment.

E. Base of unit shall have a location for thru-the-base gas and electrical connections standard.

F. Base Rail

A. Unit shall have base rails on a minimum of 4 sides.

B. Holes shall be provided in the base rails for rigging shackles to facilitate maneuvering and overhead rigging.

C. Holes shall be provided in the base rail for moving the rooftop for fork truck.

D. Base rail shall be a minimum of 14 gauge thickness.

G. Condensate pan and connections:
   A. Shall be a sloped condensate drain pan made of a non-corrosive material and be removable for cleaning.
   B. Shall comply with ASHRAE Standard 62.
   C. Shall use a 3/4" NPT drain connection, possible either through the bottom or side of the drain pan. Connection shall be made per manufacturer's recommendations.
   D. Shall be able to be easily removed.
   E. Shall be separate from the coil.
H. Standard factory-installed condensate overflow sensor.
I. Top panel:
   A. Shall be a single piece top panel over indoor section.
J. Electrical Connections
   A. All unit power wiring shall enter unit cabinet a a single, factory-prepared, continuous raised flange opening in the basepan.
   B. Thru-the-base capability
      i. Standard unit shall have a thru-the-base electrical location(s) using a raised, continuous raised flange opening in the basepan.
      ii. No basepan penetration, other than those authorized by the manufacturer, is permitted.
K. Component access panels (standard)
   A. Cabinet panels shall be easily opened for servicing.
   B. Panels covering control box, indoor fan, indoor fan motor, gas components (where applicable), and filters shall have hinges with 1/4 turn fasteners on units with factory-installed hinged option.
   C. 1/4 fasteners shall be permanently attached.

1.06 Operating Characteristics
A. Unit shall be capable of starting and running at 115°F (46°C) ambient outdoor temperature, meeting maximum load criteria of AHRI Standard 210/240 or 340/360 at ± 10% voltage.
B. Compressor with standard controls shall be capable of operation down to 50°F (10°C), ambient outdoor temperatures. Low ambient accessory kit is necessary if mechanically cooling at ambient temperatures to 0°F (-17.7°C).
C. Unit shall discharge supply air vertically or horizontally as shown on contract drawings.
D. Unit shall be factory configured for vertical supply & return configurations.
E. Unit shall be field convertible from vertical to horizontal configuration.

1.07 Electrical Requirements
A. Main power supply voltage, phase, and frequency must match those required by the manufacturer.

1.08 Evaporator fan compartment:
A. Interior cabinet surfaces shall be insulated with a minimum 1/2-in. thick, minimum 1.6 LB density, flexible fiberglass insulation bonded with foil face on the air side.
B. Insulation and adhesive shall meet NFPA 90A requirements for flame spread and smoke generation.
C. Insulation shall also be mechanically fastened with welded pin and retainer washer.

1.09 Thermostats
A. Thermostat must:
   i. Energize both "W" and "G" when calling for heat.
   ii. Have capability to energize 1 stage of cooling, and at least 1 stage of heating.
   iii. In 6 ton units, shall have the capability to energize to 2 stages.
   iv. Include capability for occupancy scheduling.

1.10 Electronic Control System for HVAC
A. Shall be complete with self-contained low-voltage control circuit protected by a fuse on the 24-V transformer side.
B. Shall utilize color-coded wiring.
C. Unit shall include a minimum of one 8-pin screw terminal connection board for connection of control wiring.

1.10.01 Safeties:

A. Compressor over-temperature, over current.

B. Standard Low-pressure switch.

i. Units shall have low pressure, loss of charge automatic reset device that will shut off compressor when tripped.

ii. Low pressure control:

Provides active protection in both heating and cooling modes at all outdoor ambient temperatures. The low pressure control is an automatic reset type and opens at approximately 15 psig and closes at approximately 40 psig. Operation is slightly different between cooling and heating modes.

C. Standard High-pressure switch.

i. Unit shall be equipped with high pressure switch device that will shut off compressor when tripped.

ii. High pressure control:

The high pressure control is an automatic reset type and opens at approximately 610 psig and closes at approximately 420 psig. The compressor and fan motor will stop when the high pressure control opens and will start again if the high side pressure drops to approximately 420 psig where the automatic reset high pressure control resets. If the high pressure control opens 3 times within a particular call for heating or cooling operation, the defrost control will lock out compressor and outdoor fan operation.

D. Automatic reset, motor thermal overload protector.

E. The unit must be permanently grounded.

F. Components are not compatible between different refrigerants. Do not use R-410A service equipment or components on R-454B equipment. System or part failure could occur.

G. Heating section shall be provided with the following minimum protections:

A. High-temperature limit switches.

B. Induced draft motor pressure switch.

C. Flame rollout switch.

D. Flame proving controls.

1.11 Standard Filter Section

A. Shall consist of factory-installed, low velocity, throwaway 2-in. thick fiberglass filters of commercially available sizes.

B. Unit will accept both 2-in. and 4-in. filters.

C. Filter face velocity shall not exceed 365 fpm at nominal airflows.

D. Filters shall be accessible through an access panel with “no-tool” removal as described in the unit cabinet section of the specification.

E. Filters access is specified in the unit cabinet section of this specification.

F. Filters shall be held in place by metal rods, facilitating easy removal and installation.

1.12 Coils

A. Standard Aluminum/MicroChannel Coils:

i. Standard evaporator and condenser coils shall be aluminum.

ii. Evaporator and condenser coils shall be leak tested to 150 psig, pressure tested to 400 psig, and qualified to burst test at 2,200 psi.

1.13 Refrigerant Components

A. Refrigerant circuit shall include the following control, safety, and maintenance features:

i. TXV metering system shall prevent mal-distribution of two-phase refrigerant.

ii. Refrigerant filter drier.

iii. Service gauge connections on suction and discharge lines.

iv. External pressure gauge ports access shall be located in front exterior of cabinet.

v. External gauge ports shall be lockable.

B. Compressors

i. Unit shall use one fully hermetic scroll compressor.

ii. 3-5 ton YB units include one single-stage compressor.

iii. 6 ton YB units include one two-stage compressor.

iv. Compressor motors shall be cooled by refrigerant gas passing through motor windings.

v. Compressors shall be internally protected from high discharge temperature conditions.

vi. Compressors shall be protected from an over-temperature and over-amperage conditions by an internal, motor overload device.

vii. Compressor shall be factory mounted on rubber grommets.

viii. Compressor motors shall have internal line break thermal and current overload protection.
ix. Crankcase heaters shall not be required for normal operating range.
x. Compressor shall have molded electrical plug.

1.14 Evaporator Fan and Motor

A. Evaporator Fan Motor:
   i. Shall have permanently lubricated bearings.
   ii. Shall have inherent automatic-reset thermal overload protection.

B. Direct Drive Evaporator Fan:
   i. Direct drive ECM technology with (5) dedicated speed selections as follows: fan, low, high, AC low static, AC high static.
   ii. Blower fan shall be double-inlet type with forward-curved blades.
   iii. Shall be constructed from steel with a corrosion resistant finish and dynamically balanced.

C. Blower Assembly:
   i. Entire assembly shall be able to slide out completely.
   ii. Shall be able to slide-out without the removal of the roof and condenser fan motors.

1.15 Condenser Fans and Motors

A. Condenser Fan Motor:
   i. Shall be a totally enclosed motor.
   ii. Shall use permanently lubricated bearings.
   iii. Shall have inherent thermal overload protection with an automatic reset feature.
   iv. Shall use a shaft-down design. Shaft-up designs including those with “rain-slinger devices” shall not be allowed.

B. Condenser Fan:
   i. Shall be a direct-driven propeller type fan.
   ii. Shall have blades riveted to corrosion-resistant steel spiders and shall be dynamically balanced.

1.16 RTU-C Controller

A. Shall be ASHRAE 62-2001 compliant.
B. Shall accept 18-32VAC input power.
C. Shall have an operating temperature range from -40ºF (-40ºC) to 158ºF (70ºC), 10%– 95% RH (non-condensing).
D. Controller shall accept the following inputs: space temperature, setpoint adjustment, outdoor air temperature, indoor air quality, outdoor air enthalpy, fire shutdown, return air enthalpy, fan status, remote time clock/door switch.
E. Shall accept a CO_2 sensor in the conditioned space and be Demand Control Ventilation (DCV) ready.
F. Shall provide the following outputs: Economizer, fan, cooling stage 1, cooling stage 2, heat stage 1, heat stage 2, exhaust, occupied.
G. Unit shall provide surge protection for the controller through a circuit breaker.
H. Shall have a field-installed communication card allowing the unit to be able to communicate at a Baud rate of 19.2K or faster.
I. Shall have an LED display independently showing the status of activity on the communication bus, and processor operation.
J. Optional field-installed BACnet plug-in communication card which includes an EIA-485 protocol communication port, or an optional field-installed LonWorks plug-in communications card.
K. Software upgrades will be accomplished by local download. Software upgrades through chip replacements are not allowed.
L. Shall be shock resistant in all planes to 5G peak, 11ms during operation, and 100G peak, 11ms during storage.
M. Shall be vibration resistant in all planes to 1.5G @ 20-300 Hz.
N. Shall support a bus length of 4000 ft max, 60 devices per 1000 ft section, and 1 RS-485 repeater per 1000 ft sections.

1.17 Open protocol, direct digital controller

A. Shall be ASHRAE 62-2001 compliant.
B. Shall accept 18-30VAC, 50-60Hz, and consumer 15VA or less power.
C. Shall have an operating temperature range from -40ºF (-40ºC) to 130ºF (54ºC), 10% - 90% RH (non-condensing).
D. Shall have either a field-installed BACnet plug-in communication card which includes an EIA-485 protocol communication port, or a field-installed LonWorks plug-in communications card.
E. The BACnet plug in communication card shall include built-in protocol for BACNET (MS/TP and PTP modes).
F. The LonWorks plug in communication card shall include the Echelon processor required for all Lon applications.

G. Shall allow access of up to 62 network variables (SNVT). Shall be compatible with all open controllers.
H. Baud rate Controller shall be selectable through the EIA-485 protocol communication port.
I. Shall have an LED display independently showing the status of serial communication, running, errors, power, all digital outputs and all analog inputs.
J. Shall accept the following inputs: space temperature, setpoint adjustment, outdoor air temperature, indoor air quality, outdoor air enthalpy, compressor lock-out, fire shutdown, enthalpy switch and fan status/filter status/humidity/remote occupancy.
K. Shall provide the following outputs: economizer, fan, cooling stage 1, cooling stage 2, heat stage 1, heat stage 2, exhaust.
L. Software upgrades will be accomplished by either local or remote download. No software upgrades through chip replacements are allowed.
M. Shall be natively equipped with Modbus communication protocol.

1.18 Special Features

A. Integrated Economizers:
   i. Integrated, gear-driven parallel modulating blade design type capable of simultaneous economizer and compressor operation.
   ii. Independent modules for vertical or horizontal return configurations shall be available. Vertical return modules shall be available as a factory-installed option.
   iii. Damper blades shall be galvanized steel with metal gears. Plastic or composite blades on intake or return shall not be acceptable.
   iv. Shall include all hardware and controls to provide free cooling with outdoor air when temperature and/or humidity are below setpoints.
   v. Shall be equipped with gear driven dampers for both the outdoor ventilation air and the return air for positive air stream control.
   vi. Shall be equipped with low-leakage dampers, not to exceed 2% leakage at 1 in. wg pressure differential.
   vii. Shall be capable of introducing up to 100% outdoor air.
   viii. Shall be equipped with a barometric relief damper capable of relieving up to 100% return air.
   ix. Shall be designed to close damper(s) during loss-of-power situations with spring return built into motor.
   x. Enthalpy sensor shall be provided as standard. Outdoor air sensor set point shall be adjustable and shall range from 40 to 100°F / 4 to 38°C. Additional sensor options shall be available as accessories.
   xi. The economizer controller shall also provide control of an accessory power exhaust unit function. Factory set at 70%, with a range of 0% to 100%.
   xii. The economizer shall maintain minimum airflow into the building during occupied period and provide design ventilation rate for full occupancy. A remote potentiometer may be used to override the damper set point.
   xiii. Dampers shall be completely closed when the unit is in the unoccupied mode.
   xiv. Economizer controller shall accept a 2-10Vdc CO2 sensor input for IAQ/DCV control. In this mode, dampers shall modulate the outdoor-air damper to provide ventilation based on the sensor input.
   xv. Actuator shall be direct coupled to economizer gear. No linkage arms or control rods shall be acceptable.
   xvi. Economizer controller shall provide indications when in free cooling mode, in the DCV mode, or the exhaust fan contact is closed.
   xvii. Economizer wire harness will have provision for smoke detector available in supply and return options.
   xviii. Shall provide fault detection and diagnostics (FDD) system in accordance with local code. Faults shall be communicated out on an alarm signal.
B. Manual damper
   i. Manual damper package shall consist of damper, air inlet screen, and rain hood which can be preset to admit up to 50% outdoor air for year-round ventilation.
C. Condenser Coil Hail Guard Assembly
   i. Shall protect against damage from hail.
   ii. Shall be louvered style.
D. Unit-Mounted, Non-Fused Disconnect Switch:
   i. Switch shall be factory-installed, internally mounted.
   ii. National Electric Code (NEC) and UL approved non-fused switch shall provide unit power shutoff.
   iii. Shall be accessible from outside the unit.
   iv. Shall provide local shutdown and lockout capability.

E. Convenience Outlet:
   i. Non-Powered convenience outlet.
   ii. Outlet shall be powered from a separate 115-120v power source.
   iii. A transformer shall not be included.
   iv. Outlet shall be field-installed and internally mounted with easily accessible 115-v female receptacle.
   v. Outlet shall include 15 amp GFI receptacle with independent fuse protection.
   vi. Outlet shall be accessible from outside the unit.

F. Propeller Power Exhaust:
   i. Power exhaust shall be used in conjunction with an integrated economizer.
   ii. Independent modules for vertical or horizontal return configurations shall be available.
   iii. Horizontal power exhaust shall be mounted in return ductwork.
   iv. Power exhaust shall be controlled by economizer controller operation. Exhaust fans shall be energized when dampers open past the 0-100% adjustable setpoint on the economizer control.
   v. Capable of adjustable but constant volume.

G. Roof Curbs (Vertical):
   i. Formed galvanized steel with wood nailer strip and shall be capable of supporting entire unit weight.
   ii. Permits installation and securing of ductwork to curb prior to mounting unit on the curb.

H. Return Air Enthalpy Sensor:
   i. The return air enthalpy sensor shall be used in conjunction with an outdoor air enthalpy sensor to provide differential enthalpy control.

I. Indoor Air Quality (CO2) Sensor:
   i. Shall be able to provide demand ventilation indoor air quality (IAQ) control.
   ii. The IAQ sensor shall be available in duct mount, wall mount, or wall mount with LED display. The set point shall have adjustment capability.

J. Smoke Detectors:
   i. Shall be a Four-Wire Controller and Detector.
   ii. Shall be environmental compensated with differential sensing for reliable, stable, and drift-free sensitivity.
   iii. Shall use magnet-activated test/reset sensor switches.
   iv. Shall have tool-less connection terminal access.
   v. Shall have a recessed momentary switch for testing and resetting the detector.
   vi. Controller shall include:
   A. One set of normally open alarm initiation contacts for connection to an initiating device circuit on a fire alarm control panel.
   B. Two Form-C auxiliary alarm relays for interface with rooftop unit or other equipment.
   C. One Form-C supervision (trouble) relay to control the operation of the Trouble LED on a remote test/reset station
   D. Capable of direct connection to two individual detector modules.
   E. Can be wired to up to 14 other duct smoke detectors for multiple fan shutdown applications.

K. Barometric Relief:
   i. Shall include damper, seals, hardware and hoods to relieve excess building pressure.
   ii. Damper shall gravity-close upon shutdown.

L. Time Guard:
   i. Shall prevent compressor short cycling by providing a 5-minute delay (±2 minutes) before restarting a compressor after shutdown for any reason.
   ii. One device shall be required per compressor.

M. Standard Factory-Installed Overflow Switch:
   i. Switch shall monitor the condensate level in drain pan and stops compression operation when overflow conditions occur.

BEFORE PURCHASING THIS APPLIANCE, READ IMPORTANT ENERGY COST AND EFFICIENCY INFORMATION AVAILABLE FROM YOUR RETAILER.

GENERAL TERMS OF LIMITED WARRANTY*

Rheem will furnish a replacement for any part of this product which fails in normal use and service within the applicable periods stated, in accordance with the terms of the limited warranty.

***For complete details of the Limited and Conditional Warranties, including applicable terms and conditions, contact your local contractor or the Manufacturer for a copy of the product warranty certificate.**

Compressor

Commercial Applications .....Five (5) Years
Residential Applications
(3 to 5 ton models only) .....Ten (10) Years

Parts

Commercial Applications.....One (1) Year
Residential Applications (3 to 5 ton models only)
(Registration Required) .....Ten (10) Years

Before proceeding with installation, refer to installation instructions packaged with each model, as well as complying with all Federal, State, Provincial, and Local codes, regulations, and practices.

Trademarks are property of their respective owners.

In keeping with its policy of continuous progress and product improvement, Rheem reserves the right to make changes without notice.

5600 Old Greenwood Road
Fort Smith, Arkansas 72908 • www.rheem.com

125 Edgeware Road, Unit 1
Brampton, Ontario • L6Y 0P5

INTEGRATED AIR & WATER

PRINTED IN U.S.A. 7/24 QG FORM NO. P11-850