SPECIFICATION DATA SHEET

Date: 01/27/11 Drawn by: M.D.C.

MODEL No. 667 PCH

UNIT S/A - R/A ADAPTERS

DIMENSIONAL DATA

667PCH1	12⅛" x 12⅛" - 11⅞" Rd. 12⅛" x 20⅛" - 13⅞" Oval
667PCH2	14⅛" x 14⅛" - 13⅞" Rd. 14⅛" x 22⅛" - 13⅞" Rd.
667PCH3	14⅛" x 14⅛" - 13⅞" Rd. 14⅛" x 24⅛" - 13⅞" Rd.
667PCH4	14⅛" x 14⅛" - 13⅞" Rd. 14⅛" x 22⅛" - 15⅞" Oval
667PCH5	14⅛" x 14⅛" - 13⅞" Rd. 14⅛" x 24⅛" - 17⅞" Oval
667PCH6	14⅛" x 14⅛" - 11⅞" Rd. 14⅛" x 22⅛" - 13⅞" Rd.
667PCH7	14⅛" x 14⅛" - 11⅞" Rd. 14⅛" x 24⅛" - 13⅞" Rd.
667PCH8	16⅛" x 16⅛" - 13⅞" Rd. 16⅛" x 16⅛" - 13⅞" Rd.
667PCH9	16⅛" x 18⅛" - 13⅞" Rd. 16⅛" x 18⅛" - 13⅞" Rd.
667PCH10	14⅛" x 14⅛" - 13⅞" Rd. 14⅛" x 24⅛" - 15⅞" Oval

1" DEEP
3" LONG COLLAR

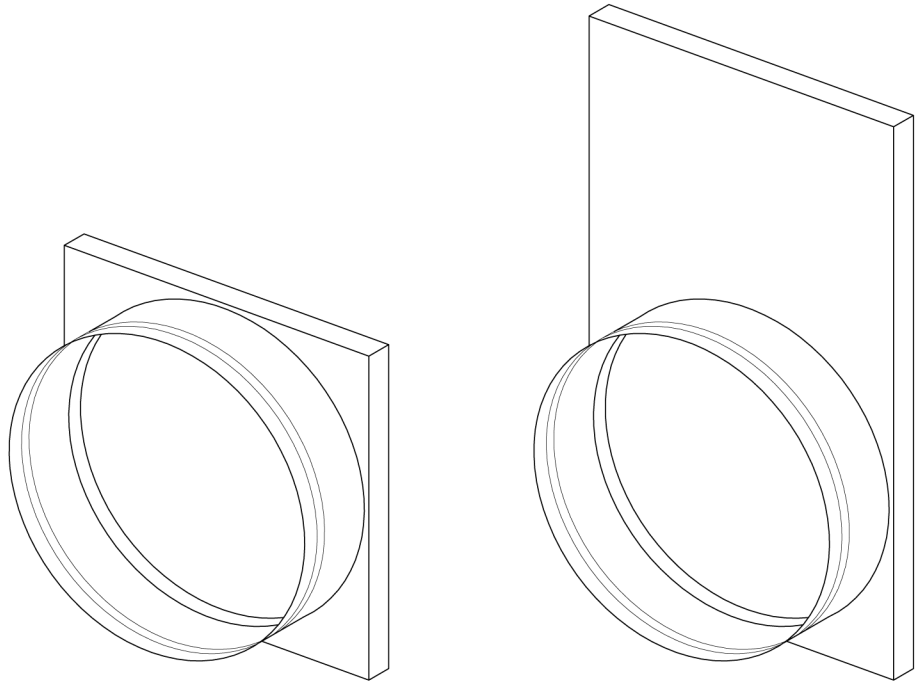

FABRICATION DATA

MATERIAL:
26 GALVANIZED STEEL

LINED WITH 1" THICK INSULATION

SPECIAL NOTES