MITSUBISHI ELECTRIC

M-SERIES

Air Conditioners

SVZ-AP12,18, 24, 30, 36NL*

SERVICE PARTS MANUAL

For use with R454B

Table of Contents

1. EXTERNAL PARTS 3
2. HEX ASSEMBLY PARTS 4
3. BLOWER PARTS 5
4. CONTROL BOX PARTS 6

 © 2025 Mitsubishi Electric US, Inc.

1. EXTERNAL PARTS

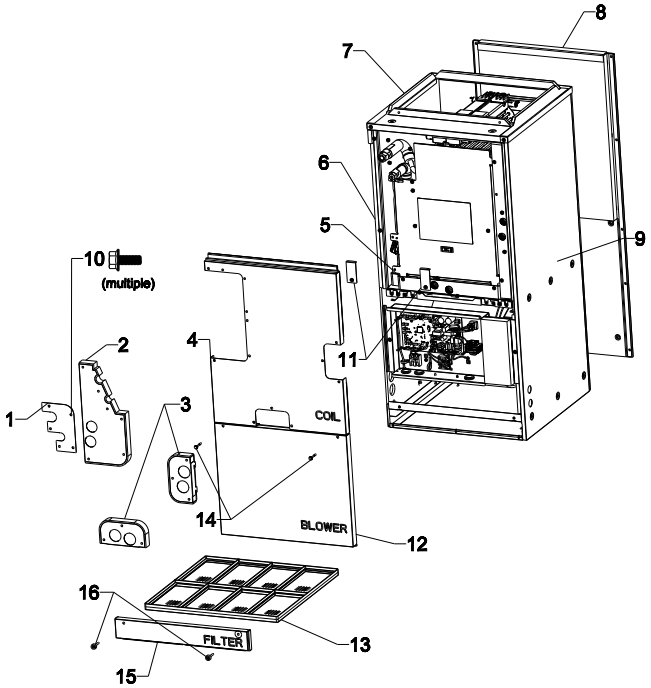

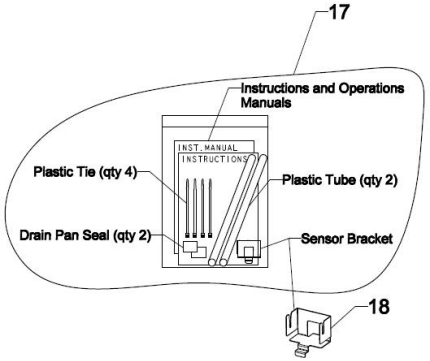

No.	Service Part No.	Part Name	Symbol in Wiring Diagram	Quantity per unit SVZ-AP-NL-U1					Remarks
				12	18	24	30	36	
1	U41 007 635	PIPE PANEL		1	1	1	1	1	
2	U41 006 635	PIPE/DRAIN PANEL S		1	1	1			
	U41 009 635	PIPE/DRAIN PANEL M					1	1	
3	U41 008 635	DRAIN PANEL		2	2	2	2	2	
4	U41 004 639	FRONT PANEL HEX S		1	1	1			
	U41 005 639	FRONT PANEL HEX M					1	1	
5	U41 008 087	SCREW H 5X10 KNURLED		28	28	28	29	29	pack of 10 screws
6	U61 002 232	CABINET LEFT S	CN44	1	1	1			*
	U61 003 232	CABINET LEFT M					1	1	
7	U41 004 643	TOP PANEL S		1	1	1			
	U41 005 643	TOP PANEL M					1	1	
8	U41 004 640	CABINET BACK S		1	1	1			
	U41 005 640	CABINET BACK M					1	1	
9	U41 004 642	CABINET RIGHT S	CN24	1	1	1			**
	U41 005 642	CABINET RIGHT M					1	1	
10	U41 009 087	SCREW M5X12 BLACK		46	46	46	46	46	pack of 10 screws
11	U41 001 086	COIL BRACKET		1	1	1	2	2	
12	U41 004 637	FRONT PANEL BLOWER S		1	1	1			
	U41 005 637	FRONT PANEL BLOWER M					1	1	
13	U41 004 500	FILTER-PLASTIC S		1	1	1			16x20
	U41 005 500	FILTER-PLASTIC M					1	1	20x20
14	U41 002 087	SCREW M5X40		2	2	2	2	2	
15	U41 004 636	FRONT PANEL FILTER S		1	1	1			
	U41 005 636	FRONT PANEL FILTER M					1	1	
16	U41 001 087	PLASTIC THUMBSCREW		2	2	2	2	2	M5X35
17	U61 001 818	ACCESSORY BAG, SVZ		1	1	1	1	1	
18	U61 004 084	SENSOR BRACKET HORIZONTAL		1	1	1	1	1	

- * The liquid/gas thermistor adapter harness is pre-installed in the Cabinet Left panel. See HEX Parts section for thermistor assy and Control Box parts for adapter harness.
- ** The electric heater wire harness is pre-installed in the Cabinet Right panel.

 © 2025 Mitsubishi Electric US, Inc.

2. HEX ASSEMBLY PARTS

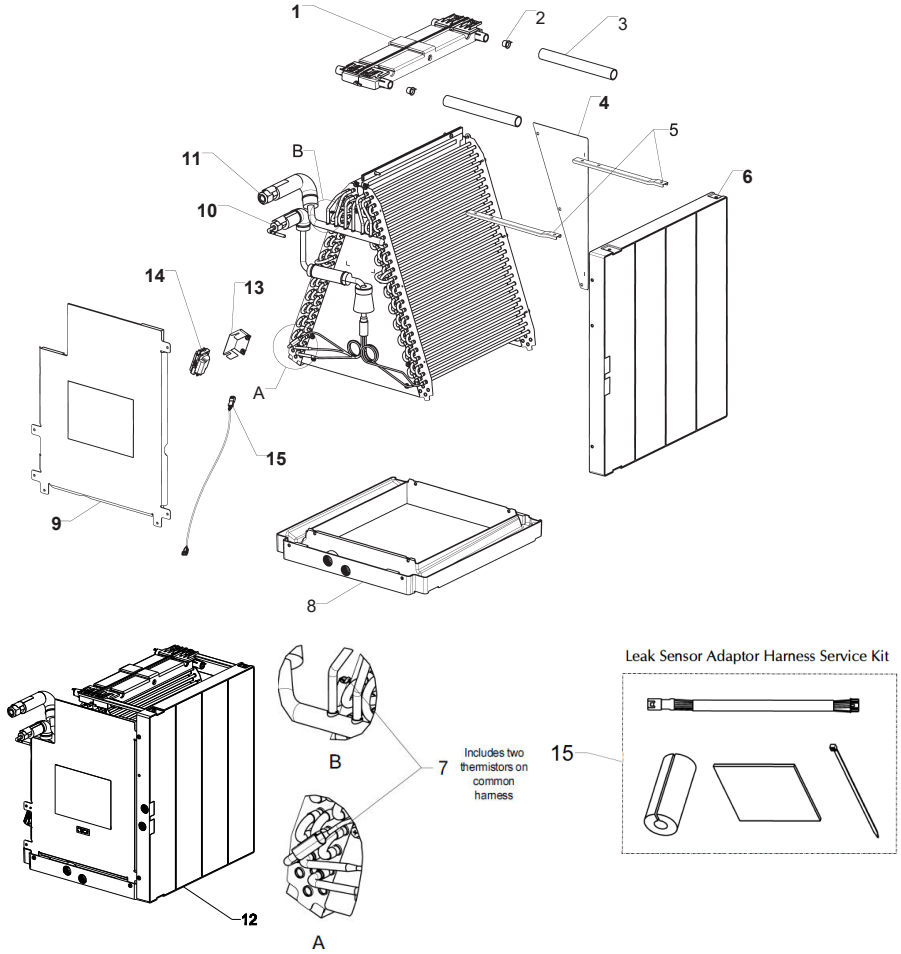

No.	Service Part No.	Part Name	Symbol in Wiring Diagram	Quantity per unit SVZ-AP-NL-U1 12	18	24	30	36	Remarks
1	U41 012 529	DRAIN PAN ASSY TOP		2	2	2	2	2	
2	U41 002 558	PLUG-TOP DRAIN PAN		4	4	4	4	4	
3	U41 001 525	HOSE-TOP DRAIN PAN		2	2	2	2	2	
4	U41 001 668	PLATE GUIDE REAR S		1	1	1			
	U41 002 668	PLATE GUIDE REAR M					1	1	
5	U41 001 662	SIDE PAN BRACKET S		2	2	2			
	U41 002 662	SIDE PAN BRACKET M					2	2	
6	U41 009 529	DRAIN PAN ASSY SIDE S		1	1	1			
	U41 010 529	DRAIN PAN ASSY SIDE M					1	1	
7	U41 006 200	THERMISTOR LIQUID/GAS PIPE SENSOR ASSY	(CN44)	1	1	1			TH2/TH5 Connects to CN44 via adapter harness in Cabinet Left panel. See Control Box Parts for Adapter Harness
	U41 008 200	THERMISTOR LIQUID/GAS PIPE SENSOR ASSY					1	1	
8	U41 006 529	DRAIN PAN ASSY LOWER S		1	1	1			
	U41 007 529	DRAIN PAN ASSY LOWER M					1	1	
9	U61 001 668	PLATE GUIDE FRONT S		1	1	1			
	U61 002 668	PLATE GUIDE FRONT M					1	1	
10	U61 001 122	NUT FLARE 3/8		1		1	1	1	
	U61 002 122	NUT FLARE 1/4		1	1				
11	U61 003 122	NUT FLARE 1/2			1				
	U61 004 122	NUT FLARE 5/8				1	1	1	
12	U61 002 480	HEAT EXCHANGER AP12		1					Includes all HEX parts
	U61 003 480	HEAT EXCHANGER AP18			1				Includes all HEX parts
	U61 004 480	HEAT EXCHANGER AP24				1			Includes all HEX parts
	U61 005 480	HEAT EXCHANGER AP30					1	1	Includes all HEX parts
13	U61 001 086	SENSOR BRACKET		1	1	1	1	1	
14	U61 001 084	A2L SENSOR ASSY		1	1	1	1	1	Without Lead Wire
15	U61 003 084	A2L SENSOR ADAPTER HARNESS KIT		1	1	1	1	1	INSTRUCTION & INSULATION

© 2025 Mitsubishi Electric US, Inc.

3. BLOWER PARTS

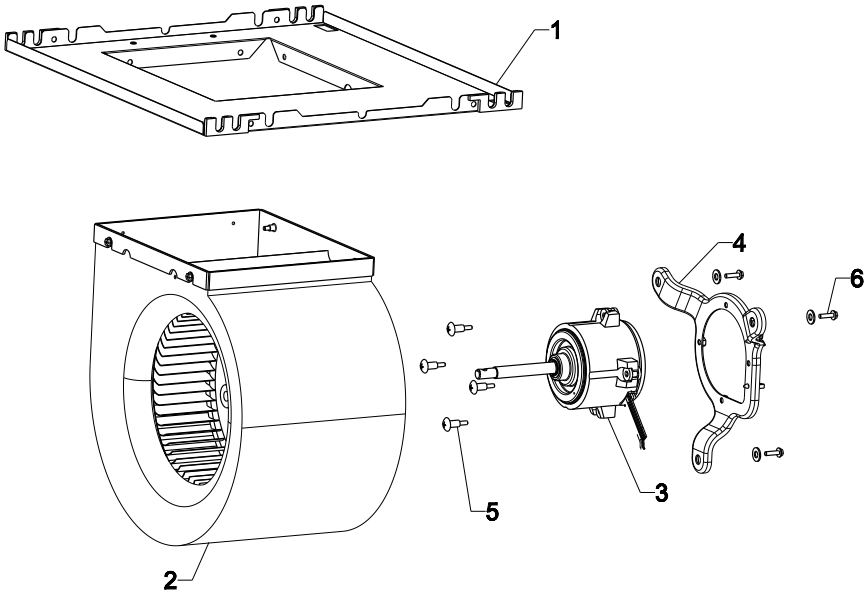

No.	Service Part No.	Part Name	Symbol in Wiring Diagram	Quantity per unit SVZ-AP-NL-U1					Remarks
				12	18	24	30	36	
1	U41 015 638	FRAME FAN INS S		1	1	1			
	U41 016 638	FRAME FAN INS M					1	1	
2	U41 005 129	FAN CASE S		1	1	1			
	U41 006 129	FAN CASE M					1	1	
3	U41 005 220	BLOWER MOTOR S	CNMF	1	1	1			MS (FAN MOTOR)
	U41 006 220	BLOWER MOTOR M					1	1	
4	U41 001 130	MOTOR BRACKET S M		1	1	1	1	1	
5	U41 005 087	BOLT MOTOR (S, M)		4	4	4	4	4	
6	U41 003 130	MOTOR BRACKET BOLT KIT		3	3	3	3	3	

 © 2025 Mitsubishi Electric US, Inc.

4. CONTROL BOX PARTS

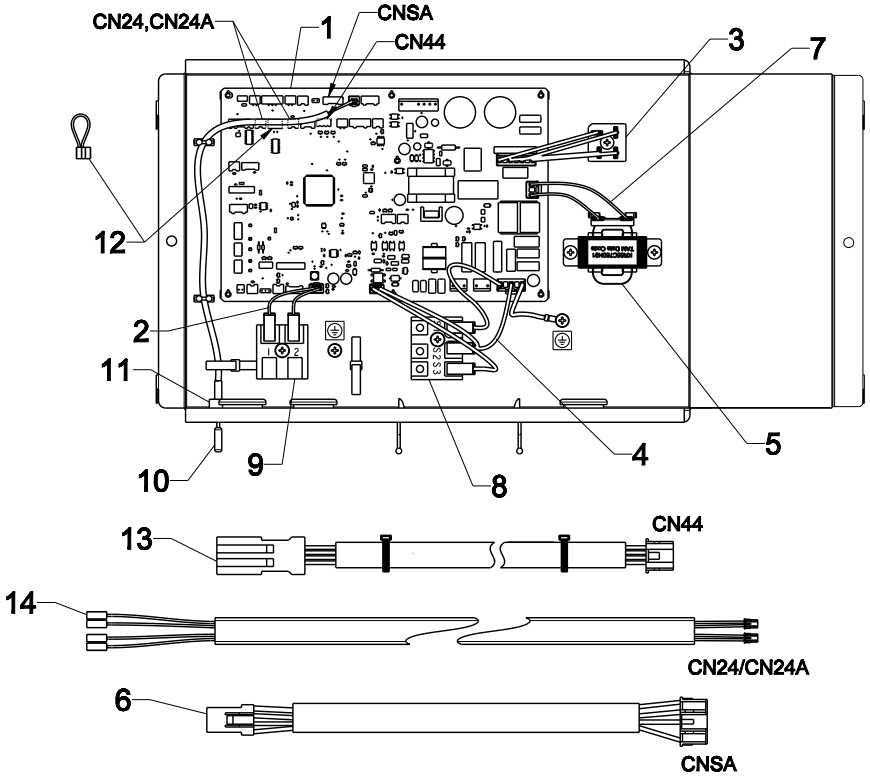

No.	Service Part No.	Part Name	Symbol in Wiring Diagram	Quantity per unit SVZ-AP-NL-U1					Remarks
				12	18	24	30	36	
1	U61 001 280	CONTROL/POWER BOARD		1	1	1			
	U61 002 280	CONTROL/POWER BOARD					1	1	
2	U61 003 392	LEAD WIRE ASSY CN3A	CN3A	1	1	1	1	1	Connects to Terminal Block; 1, 2
3	U61 001 244	DIODE STACK Assy					1	1	Includes cable assy
4	U41 024 392	LEAD WIRE ASSY PWR	CND & CN3C	1	1	1	1	1	Connects to Terminal Block; S1, S2, S3
5	U61 002 337	REACTOR		1	1	1	1	1	
6	U61 002 084	A2L SENSOR LEAD WIRE	CNSA	1	1	1	1	1	
7	U61 004 392	LEAD WIRE ASSY CNACL		1	1	1	1	1	
8	U41 004 246	TERMINAL BLOCK ASSY	TB4	1	1	1	1	1	S1, S2, S3
9	U41 003 246	TERMINAL BLOCK	TB15	1	1	1	1	1	1, 2
10	U41 007 200	THERMISTOR RETURN AIR TEMP.	CN20	1	1	1	1	1	TH1
11	U41 002 104	BUSHING SRB-R-2		1	1	1	1	1	
12	U41 001 G08	JUMPER CONNECTOR	CN4F	1	1	1	1	1	
13	U41 033 392	LIQUID/GAS THERMISTOR ADAPTER HARNESS KIT	CN44	1	1	1	1	1	Does **not** include the thermistor assembly: THERMISTOR RETURN AIR TEMP Harness also pre-installed in Cabinet Left Panel. See External parts
14	U41 031 392	ELECTRIC HEATER WIRE HARNESS KIT	CN24	1	1	1	1	1	Harness also pre-installed in Cabinet Left Panel. See External parts

 © 2025 Mitsubishi Electric US, Inc.

This product is designed and intended for use in the residential, commercial and light-industrial environment.

MITSUBISHI ELECTRIC US, INC.

Toll Free: 800-433-4822

MEUS DOC# MD-2325-K008 Ver. 1
February 2025
Specifications are subject to change without notice.

© 2025 Mitsubishi Electric US, Inc.