GRANDAIRE®
ADVANTAGE SERIES

SM_ODU_R454B_3D INV_US1_NB_2405

OUTDOOR UNIT INVERTER SERIES

SERVICE MANUAL

Model: W5H9V24AKAAA
W5H9V36AKAAA
W5H9V48AKAAA
W5H9V60AKAAA

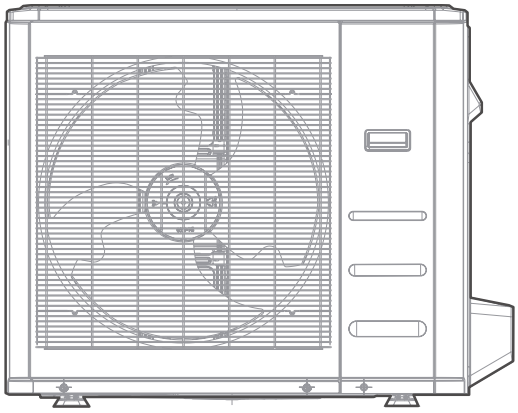

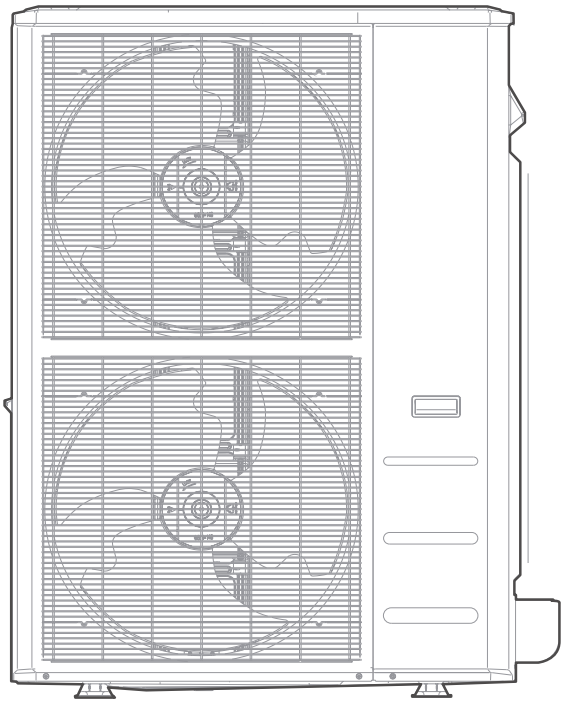

A2L

Table of Contents

§. Safety Precautions

1. Precautions
2. Information servicing

§. Model Reference & External Appearance

1. Model Reference
2. External Appearance

§. Outdoor Unit

1. Dimensional Drawings
2. Service Space
3. Capacity Correction Factor for Height Difference
4. Noise Criterion Curves
5. Refrigerant Cycle Diagrams
6. Electrical Wiring Diagrams

§. Installation

§. Basic functions

§. Troubleshooting

1. Safety Caution
2. General Troubleshooting
3. Outdoor Unit Point Check Function
4. Quick Maintenance by Error Code
5. Troubleshooting by Error Code
6. Check Procedures

Appendix

i) Temperature Sensor Resistance Value Table for TP (°C – K)

ii) Other Temperature Sensor Resistance Value Table (°C – K)

iii) Pressure On Service Port

Safety Precautions

Contents

1. Precautions.....2
2. Information servicing(For flammable materials).....4

1. Precautions

To prevent personal injury, or property or unit damage, adhere to all precautionary measures and instructions outlined in this manual. Before servicing a unit, refer to this service manual and its relevant sections.

Failure to adhere to all precautionary measures listed in this section may result in personal injury, damage to the unit or to property, or in extreme cases, death.

WARNING indicates a potentially hazardous situation which if not avoided could result in serious personal injury, or death.

CAUTION indicates a potentially hazardous situation which if not avoided could result in minor or moderate personal injury, or unit damage.

1.1 In case of Accidents or Emergency

WARNING

- If a gas leak is suspected, immediately turn off the gas and ventilate the area if a gas leak is suspected before turning the unit on.
- If strange sounds or smoke is detected from the unit, turn the breaker off and disconnect the power supply cable.
- If the unit comes into contact with liquid, contact an authorized service center.
- If liquid from the batteries makes contact with skin or clothing, immediately rinse or wash the area well with clean water.
- Do not insert hands or other objects into the air inlet or outlet while the unit is plugged in.
- Do not operate the unit with wet hands.
- Do not use a remote controller that has previously been exposed to battery damage or battery leakage.

CAUTION

- Clean and ventilate the unit at regular intervals when operating it near a stove or near similar devices.
- Do not use the unit during severe weather conditions. If possible, remove the product from the window before such occurrences.

1.2 Pre-Installation and Installation

WARNING

- Use this unit only on a dedicated circuit.
- Damage to the installation area could cause the unit to fall, potentially resulting in personal injury, property damage, or product failure.
- Only qualified personnel should disassemble, install, remove, or repair the unit.
- Only a qualified electrician should perform electrical work. For more information, contact your dealer, seller, or an authorized service center.

CAUTION

- While unpacking be careful of sharp edges around the unit as well as the edges of the fins on the condenser and evaporator.

1.3 Operation and Maintenance

WARNING

- Do not use defective or under-rated circuit breakers.
- Ensure the unit is properly grounded and that a dedicated circuit and breaker are installed.
- Do not modify or extend the power cable. Ensure the power cable is secure and not damaged during operation.
- Do not unplug the power supply plug during operation.
- Do not store or use flammable materials near the unit.
- Do not open the inlet grill of the unit during operation.
- Do not touch the electrostatic filter if the unit is equipped with one.
- Do not block the inlet or outlet of air flow to the unit.
- Do not use harsh detergents, solvents, or similar items to clean the unit. Use a soft cloth for cleaning.
- Do not touch the metal parts of the unit when removing the air filter as they are very sharp.
- Do not step on or place anything on the unit or outdoor units.
- Do not drink water drained from the unit
- Avoid direct skin contact with water drained from the unit.
- Use a firm stool or step ladder according to manufacturer procedures when cleaning or maintaining the unit.

CAUTION

- Do not install or operate the unit for an extended period of time in areas of high humidity or in an environment directly exposing it to sea wind or salt spray.
- Do not install the unit on a defective or damaged installation stand, or in an unsecure location.
- Ensure the unit is installed at a level position
- Do not install the unit where noise or air discharge created by the outdoor unit will negatively impact the environment or nearby residences.
- Do not expose skin directly to the air discharged by the unit for prolonged periods of time.
- Ensure the unit do not operate in areas water or other liquids.
- Ensure the drain hose is installed correctly to ensure proper water drainage.
- When lifting or transporting the unit, it is recommended that two or more people are used for this task.
- When the unit is not to be used for an extended time, disconnect the power supply or turn off the breaker.

WARNING For Using Flammable Refrigerant

1. Installation(where refrigerant pipes are allowed)
- Any person who is involved with working on or breaking into a refrigerant circuit should hold a current valid certificate from an industry-accredited assessment authority, which authorises their competence to handle refrigerants safely in accordance with an industry recognised assessment specification.
- Maintenance and repair requiring the assistance of other skilled personnel shall be carried out under the supervision of the person competent in the use of flammable refrigerants.
- That the installation of pipe-work shall be kept to a minimum.
- That pipe-work shall be protected from physical damage.
- Where refrigerant pipes shall be compliance with national gas regulations.
- That mechanical connections shall be accessible for maintenance purposes.
- Be more careful that foreign matter(oil, water,etc) does not enter the piping.
  Also, when storing the piping, securely seal the opening by pinching, taping, etc.
- Appliance shall be stored in a well ventilated area where the room size corresponds to the room area as specifiec for operation.
- Appliance shall be stored in a well ventilated area where the room size corresponds to the room area as specifiec for operation.
- Joints shall be tested with detection equipment with a capability of 5 g/year of refrigerant or better, with the equipment in standstill and under operation or under a pressure of at least these standstill or operation conditions after installation. Detachable joints shall NOT be used in the indoor side of the unit(brazed, welded joint could be used).
- In cases that require mechanical ventilation, ventilation openings shall be kept clear of obstruction.

2. When a FLAMMABLE REFRIGERANT is used, the requirements for installation space of appliance and /or ventilation requirements are determined according to
- the mass charge amount(M) used in the appliance,
- the installation location,
- the type of ventilation of the location or of the appliance.
- piping material, pipe routing, and installation shall include protection from physical damage in operation and service, and be in compliance with national and local codes and standards, such as ASHRAE 15, IAPMO Uniform Mechanical Code, ICC International Mechanical Code, or CSA B52. All field joints shall be accessible for inspection prior to being covered or enclosed.
- that protection devices, piping, and fittings shall be protected as far as possible against adverse environmental efects, for example, the danger of water collecting and freezing in relief pipes or the accumulation of dirt and debris;
- that piping in refrigeration systems shall be so designed and installed to minimize the likelihood of hydraulic shock damaging the system;
- that steel pipes and components shall be protected against corrosion with a rustproof coating before applying any insulation;
- that precautions shall be taken to avoid excessive vibration or pulsation;
- the minimum floor area of the room shall be mentioned in the form of a table or a single figure without reference to a formula;
- after completion of field piping for split systems, the field pipework shall be pressure tested with an inert gas and then vacuum tested prior to refrigerant charging, according to the following requirements:

a. The minimum test pressure for the low side of the system shall be the low side design pressure and the minimum test pressure for the high side of the system shall be the high side design pressure, unless the high side of the system can not be isolated from the low side of the system in which case the entire system shall be pressure tested to the low side design pressure.
b. The test pressure after removal of pressure source shall be maintained for at least 1 h with no decrease of pressure indicated by the test gauge, with test gauge resolution not exceeding 5% of the test pressure.
c. During the evacuation test, after achieving a vacuum level specified in the manual or less, the refrigeration system shall be isolated from the vacuum pump and the pressure shall not rise above 1500 microns within 10 min. The vacuum pressure level shall be specified in the manual, and shall be the lessor of 500 microns or the value required for compliance with national and local codes and standards, which may vary between residential, commercial,and industrial buildings.

-- field-made refrigerant joints indoors shall be tightness tested according to the following requirements: The test method shall have a sensitivity of 5 grams per year of refrigerant or better under a pressure of at least 0,25 times the maximum allowable pressure. No leak shall be detected.
-- Any servicing shall be performed only as recommended by the manufacturer.

3. Qualification of workers
Any maintenance, service and repair operations must be required qualification of the working personnel. Every working procedure that afects safety means shall only be carried out by competent persons that joined the training and achieved competence should be documented by a certificate. The training of these procedures is carried out by national training organizations or manufacturers that are accredited to teach the relevant national competency standards that may be set in legislation. All training shall follow the ANNEX HH requirements of UL 60335-2-40 4th Edition.
Examples for such working procedures are:
- breaking into the refrigerating circuit;
- opening of sealed components;
- opening of ventilated enclosures.

2. Information servicing(For flammable materials)

2.1 Checks to the area

- Prior to beginning work on systems containing flammable refrigerants, safety checks are necessary to ensure that the risk of ignition is minimized. For repair to the refrigerating system, the following precautions shall be complied with prior to conducting work on the system.

2.2 Work procedure

- Work shall be undertaken under a controlled procedure so as to minimise the risk of a flammable gas or vapour being present while the work is being performed.

2.3 General work area

- All maintenance staff and others working in the local area shall be instructed on the nature of work being carried out. Work in confined spaces shall be avoided.

2.4 Checking for presence of refrigerant

- The area shall be checked with an appropriate refrigerant detector prior to and during work, to ensure the technician is aware of potentially flammable atmospheres.
- Ensure that the leak detection equipment being used is suitable for use with flammable refrigerants, i.e. no sparking, adequately sealed or intrinsically safe.

2.5 Presence of fire extinguisher

- If any hot work is to be conducted on the refrigeration equipment or any associated parts, appropriate fire extinguishing equipment shall be available to hand. Have a dry powder or CO2 fire extinguisher adjacent to the charging area.

2.6 No ignition sources

- No person carrying out work in relation to a REFRIGERATING SYSTEM which involves exposing any pipe work shall use any sources of ignition in such a manner that it may lead to the risk of fire or explosion. All possible ignition sources, including cigarette smoking, should be kept sufciently far away from the site of installation, repairing, removing and disposal, during which refrigerant can possibly be released to the surrounding space. Prior to work taking place, the area around the equipment is to be surveyed to make sure that there are no flammable hazards or ignition risks.
- "No Smoking" signs shall be displayed.

2.7 Ventilated area

- Ensure that the area is in the open or that it is adequately ventilated before breaking into the system or conducting any hot work. A degree of ventilation shall continue during the period that the work is carried out. The ventilation should safely disperse any released refrigerant and preferably expel it externally into the atmosphere.

2.8 Checks to the refrigeration equipment

- Where electrical components are being changed, they shall be fit for the purpose and to the correct specification. At all times the manufacturer's maintenance and service guidelines shall be followed. If in doubt consult the manufacturer's technical department for assistance. The following checks shall be applied to installations using FLAMMABLE REFRIGERANTS:
  - the actual refrigerant charge is in accordance with the room size within which the refrigerant containing parts are installed;
  - the ventilation machinery and outlets are operating adequately and are not obstructed;
  - if an indirect refrigerating circuit is being used, the secondary circuits shall be checked for the presence of refrigerant;
  - marking to the equipment continues to be visible and legible, marking and signs that are illegible shall be corrected;
  - refrigeration pipe or components are installed in a position where they are unlikely to be exposed to any substance which may corrode refrigerant containing components, unless the components are constructed of materials which are inherently resistant to being corroded or are suitably protected against being so corroded.

2.9 Checks to electrical devices

- Repair and maintenance to electrical components shall include initial safety checks and component inspection procedures. If a fault exists that could compromise safety, then no electrical supply shall be connected to the circuit until it is satisfactorily dealt with. If the fault cannot be corrected immediately but it is necessary to continue operation, an adequate temporary solution shall be used. This shall be reported to the owner of the equipment so all parties are advised.

Initial safety checks shall include:

- that capacitors are discharged: this shall be done in a safe manner to avoid possibility of sparking;
- that there no live electrical components and wiring are exposed while charging, recovering or purging the system;
- that there is continuity of earth bonding.

2.10 Sealed electrical components shall be replaced

2.11 Intrinsically safe components must be replaced

2.12 Cabling

- Check that cabling will not be subject to wear, corrosion, excessive pressure, vibration, sharp edges or any other adverse environmental effects. The check shall also take into account the effects of aging or continual vibration from sources such as compressors or fans.

2.13 Detection of flammable refrigerants

- Under no circumstances shall potential sources of ignition be used in the searching for or detection of refrigerant leaks. A halide torch (or any other detector using a naked flame) shall not be used.
- The following leak detection methods are deemed acceptable for refrigerant systems. Electronic leak detectors may be used to detect refrigerant leaks but, in the case of FLAMMABLE REFRIGERANTS, the sensitivity may not be adequate, or may need re-calibration. (Detection equipment shall be calibrated in a refrigerant-free area.) Ensure that the detector is not a potential source of ignition and is suitable for the refrigerant used. Leak detection equipment shall be set at a percentage of the LFL of the refrigerant and shall be calibrated to the refrigerant employed, and the appropriate percentage of gas (25 % maximum) is confirmed. Leak detection fluids are also suitable for use with most refrigerants but the use of detergents containing chlorine shall be avoided as the chlorine may react with the refrigerant and corrode the copper pipe-work.

NOTE Examples of leak detection fluids are

- bubble method,

- fluorescent method agents.

- If a leak is suspected, all naked flames shall be removed/ extinguished.
- If a leakage of refrigerant is found which requires brazing, all of the refrigerant shall be recovered from the system, or isolated (by means of shut of valves) in a part of the system remote from the leak. See the following instructions of removal of refrigerant.

2.14 Removal and evacuation

- When breaking into the refrigerant circuit to make repairs or for any other purpose, conventional procedures shall be used. However, it is important that best practice is followed since flammability is a consideration.
- The following procedure shall be adhered to:
  - safely remove refrigerant following local and national regulations;
  - evacuate;
  - purge the circuit with inert gas(optional for A2L);
  - evacuate(optional for A2L);
  - continuously flush or purge with inert gas when using flame to open circuit; and open the circuit;
- The refrigerant charge shall be recovered into the correct recovery cylinders if venting is not allowed by local and national codes. For appliances containing flammable refrigerants, the system shall be purged with oxygen-free nitrogen to render the appliance safe for flammable refrigerants. This process might need to be repeated several times. Compressed air or oxygen shall not be used for purging refrigerant systems.
- For appliances containing flammable refrigerants, refrigerants purging shall be achieved by breaking the vacuum in the system with oxygen-free nitrogen and continuing to fill until the working pressure is achieved, then venting to atmosphere, and finally pulling down to a vacuum (optional for A2L). This process shall be repeated until no refrigerant is within the system (optional for A2L). When the final oxygen-free nitrogen charge is used, the system shall be vented down to atmospheric pressure to enable work to take place.
- The outlet for the vacuum pump shall not be close to any potential ignition sources, and ventilation shall be available.

2.15 Charging procedures

- In addition to conventional charging procedures, the following requirements shall be followed:
  - Works shall be undertaken with appropriate tools only (In case of uncertainty, please consult the manufacturer of the tools for use with flammable refrigerants)
  - Ensure that contamination of different refrigerants does not occur when using charging equipment. Hoses or lines shall be as short as possible to minimize the amount of refrigerant contained in them.
  - Cylinders shall be kept upright.
  - Ensure that the refrigeration system is earthed prior to charging the system with refrigerant.
  - Label the system when charging is complete(if not already).
  - Extreme care shall be taken not to overfill the refrigeration system.
  - Prior to recharging the system it shall be pressure tested with OFN. The system shall be leak tested on completion of charging but prior to commissioning. A follow up leak test shall be carried out prior to leaving the site.

2.16 Decommissioning

Before carrying out this procedure, it is essential that the technician is completely familiar with the equipment and all its detail. It is recommended good practice that all refrigerants are recovered safely. Prior to the task being carried out, an oil and refrigerant sample shall be taken in case analysis is required prior to re-use of recovered refrigerant. It is essential that electrical power is available before the task is commenced.

- Become familiar with the equipment and its operation.
- Isolate system electrically.
- Before attempting the procedure ensure that:
  - mechanical handling equipment is available, if required, for handling refrigerant cylinders;
  - all personal protective equipment is available and being

used correctly;

- the recovery process is supervised at all times by a competent person;
- recovery equipment and cylinders conform to the appropriate standards.

- Pump down refrigerant system, if possible.
- If a vacuum is not possible, make a manifold so that refrigerant can be removed from various parts of the system.
- Make sure that cylinder is situated on the scales before recovery takes place.
- Start the recovery machine and operate in accordance with manufacturer's instructions.
- Do not overfill cylinders. (No more than 80 % volume liquid charge).
- Do not exceed the maximum working pressure of the cylinder, even temporarily.
- When the cylinders have been filled correctly and the process completed, make sure that the cylinders and the equipment are removed from site promptly and all isolation valves on the equipment are closed off.
- Recovered refrigerant shall not be charged into another refrigeration system unless it has been cleaned and checked.

2.17 Labelling

- Equipment shall be labelled stating that it has been de-commissioned and emptied of refrigerant. The label shall be dated and signed. For appliances containing FLAMMABLE REFRIGERANTS, ensure that there are labels on the equipment stating the equipment contains FLAMMABLE REFRIGERANT.

2.18 Recovery

- When removing refrigerant from a system, either for servicing or decommissioning,
- it is recommended good practice that all refrigerants are removed safely.
- When transferring refrigerant into cylinders, ensure that only appropriate refrigerant recovery cylinders are employed. Ensure that the correct number of cylinders for holding the total system charge is available. All cylinders to be used are designated for the recovered refrigerant and labelled for that refrigerant (i. e. special cylinders for the recovery of refrigerant). Cylinders shall be complete with pressure-relief valve and associated shut-of valves in good working order. Empty recovery cylinders are evacuated and, if possible,cooled before recovery occurs.
- The recovery equipment shall be in good working order with a set of instructions concerning the equipment that is at hand and shall be suitable for the recovery of the flammable refrigerant. If in doubt the manufacturer should be consulted. In addition, a set of calibrated weighing scales shall be available and in good working order. Hoses shall be complete with leak-free disconnect couplings and in good condition.
- The recovered refrigerant shall be processed according to local legislation in the correct recovery cylinder, and the relevant waste transfer note arranged. Do not mix refrigerants in recovery units and especially not in cylinders.
- If compressors or compressor oils are to be removed, ensure that they have been evacuated to an acceptable level to make certain that flammable refrigerant does not remain within the lubricant. The compressor body shall not be heated by an open flame or other ignition sources to accelerate this process. When oil is drained from a system, it shall be carried out safely.

2.19 Transportation, marking and storage for units

1. Transport of equipment containing flammable refrigerants

   Compliance with the transport regulations

2. Marking of equipment using signs

   Compliance with local regulations

3. Disposal of equipment using flammable refrigerants

   Compliance with national regulations

4. Storage of equipment/appliances

   The storage of equipment should be in accordance with the manufacturer's instructions.

5. Storage of packed (unsold) equipment

   Storage package protection should be constructed such that mechanical damage to the equipment inside the package will not cause a leak of the refrigerant charge. The maximum number of pieces of equipment permitted to be stored together will be determined by local regulations.

Model Reference

Contents

1. Model Reference 2
2 External Appearance 3

1. Model Reference

Outdoor Unit Model	Capacity (Btu/h)	Power Supply
MOX330-18HFN10-M3	18k Regular Heat	1Ph, 208/230V~, 60Hz
MOX430-18HFN10-M3X	18k Hyper Heat	
MOX430-24HFN10-M3	24k Regular Heat	
MOX430-24HFN10-M3X	24k Hyper Heat	
MOD30-30HFN10-M3	30k Regular Heat	
MOD30-30HFN10-M3X[*1]	30k Hyper Heat	
MOD30-36HFN10-M3	36k Regular Heat	
MOX630-36HFN10-M3X	36k Hyper Heat	
MOD30-36HFN10-M3X		
MOX630-48HFN10-M3	48k Regular Heat	
MOX630-48HFN10-M3X[*2]	48k Hyper Heat	
MOX630-60HFN10-M3	60k Regular Heat	
MOE30-60HFN10-M3X	60k Hyper Heat	

[*1]:When combination with 3Gen AHU, an additional 0.60kg/21.16 oz of refrigerant is reqired.
[*2]:When combination with 3Gen AHU, an additional 0.65kg/22.93 oz of refrigerant is reqired.

2. External Appearance

Outdoor Unit

18k Regular Heat

18k Hyper Heat/24k Regular Heat/24k Hyper Heat

30k Regular Heat/36k Regular Heat/36k Hyper Heat(D Cabinet)

Outdoor Unit

36k Hyper Heat(X6 Cabinet)/48k Regular Heat/60k Regular Heat

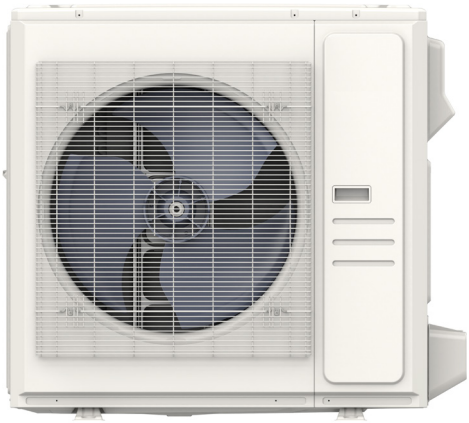

60k Hyper Heat

Outdoor Unit

Contents

1. Dimensional Drawings 2
2. Installation location 9
3. Capacity Correction Factor for Height Difference 10
4. Noise Criterion Curves 16
5. Refrigerant Cycle Diagrams 20
6. Electrical Wiring Diagrams 24

1. Dimensional Drawings

Please check the corresponding dimensional drawing according to the panel plate.

Outdoor Unit Model	Platform
MOX330-18HFN10-M3	X330
MOX430-18HFN10-M3X	X430
MOX430-24HFN10-M3	X430
MOX430-24HFN10-M3X	X430
MOD30-30HFN10-M3	D30
MOD30-36HFN10-M3	D30
MOD30-30HFN10-M3X	D30
MOX630-36HFN10-M3X	X630
MOD30-36HFN10-M3X	D30
MOX630-48HFN10-M3	X630
MOX630-48HFN10-M3X	X630
MOX630-60HFN10-M3	X630
MOE30-60HFN10-M3X	E30

X330 Platform

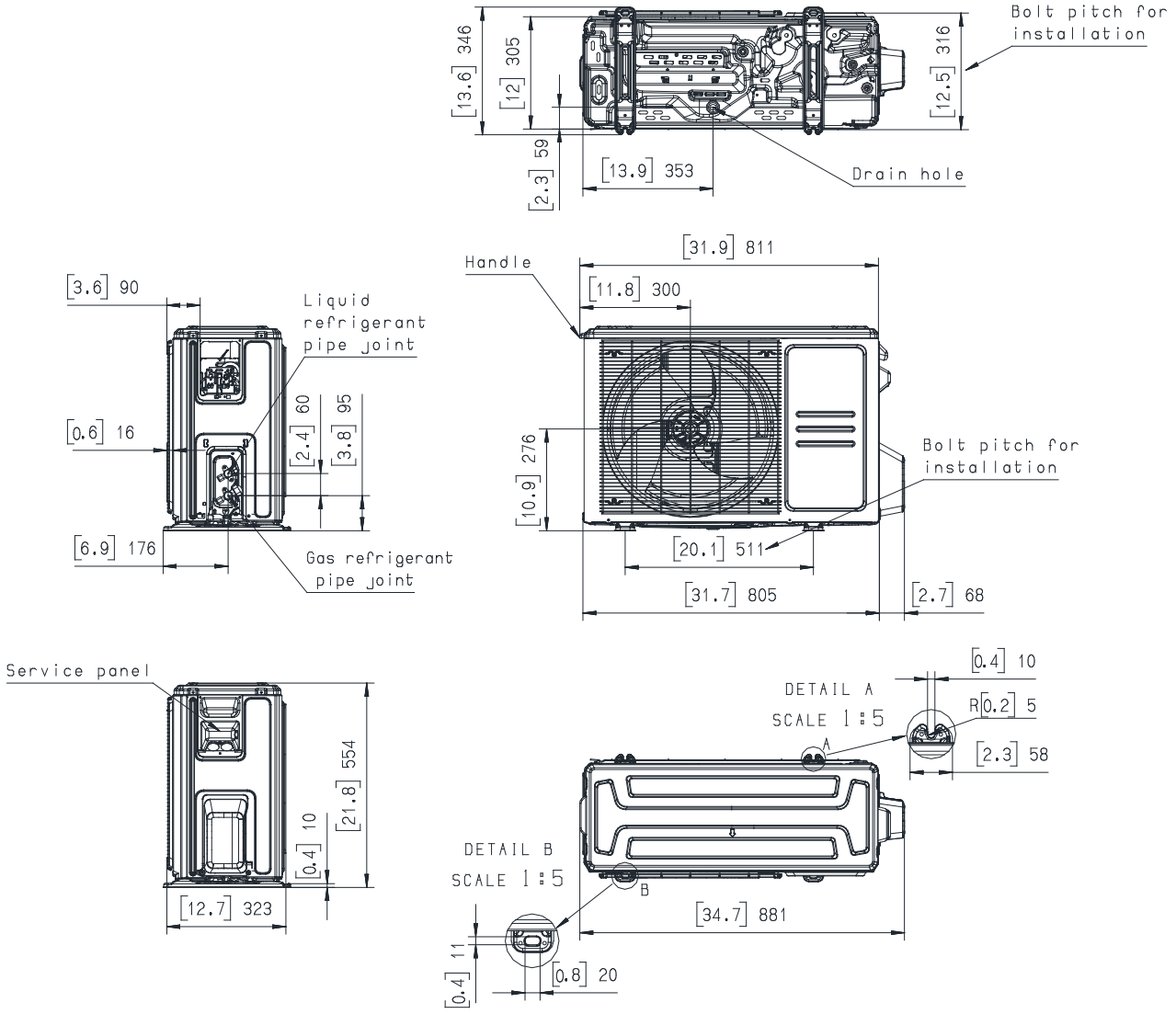

X430 Platform

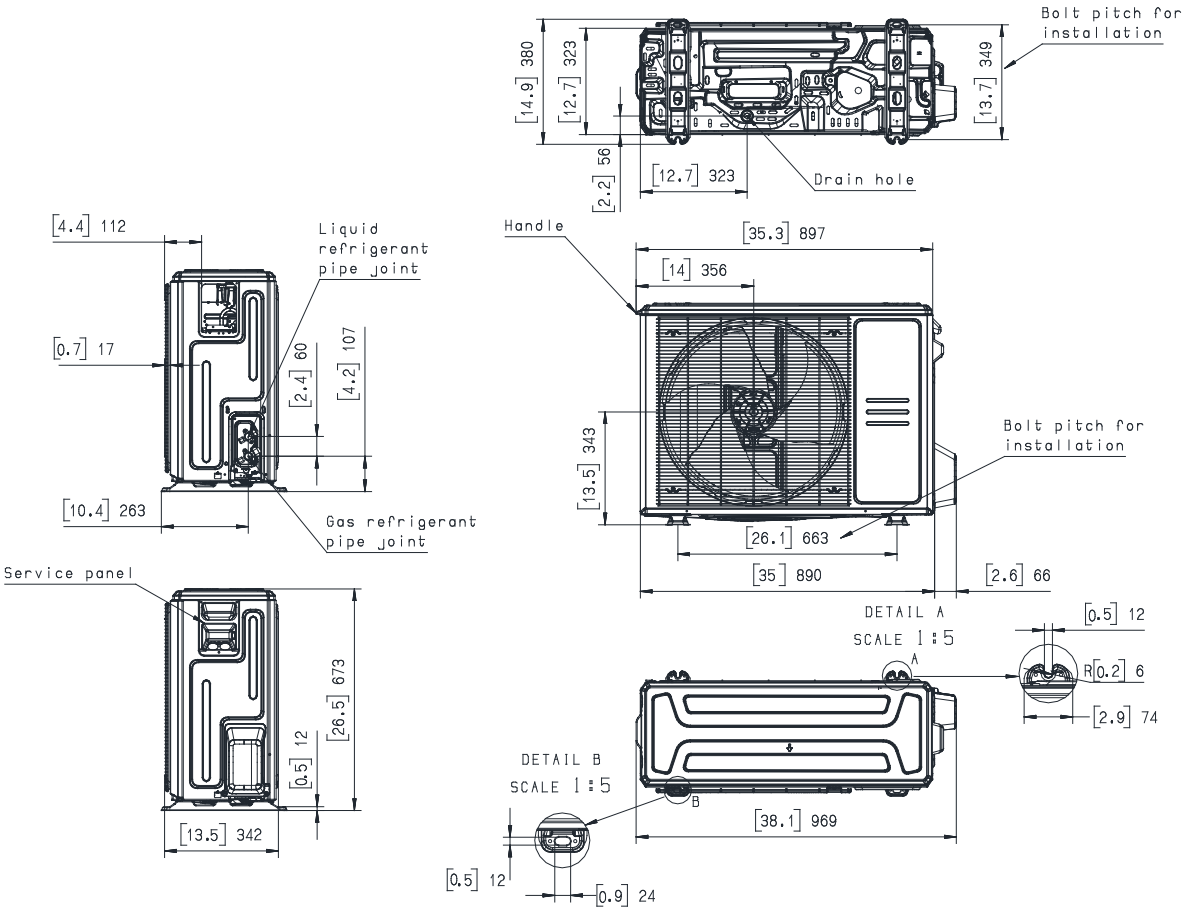

D30 Platform

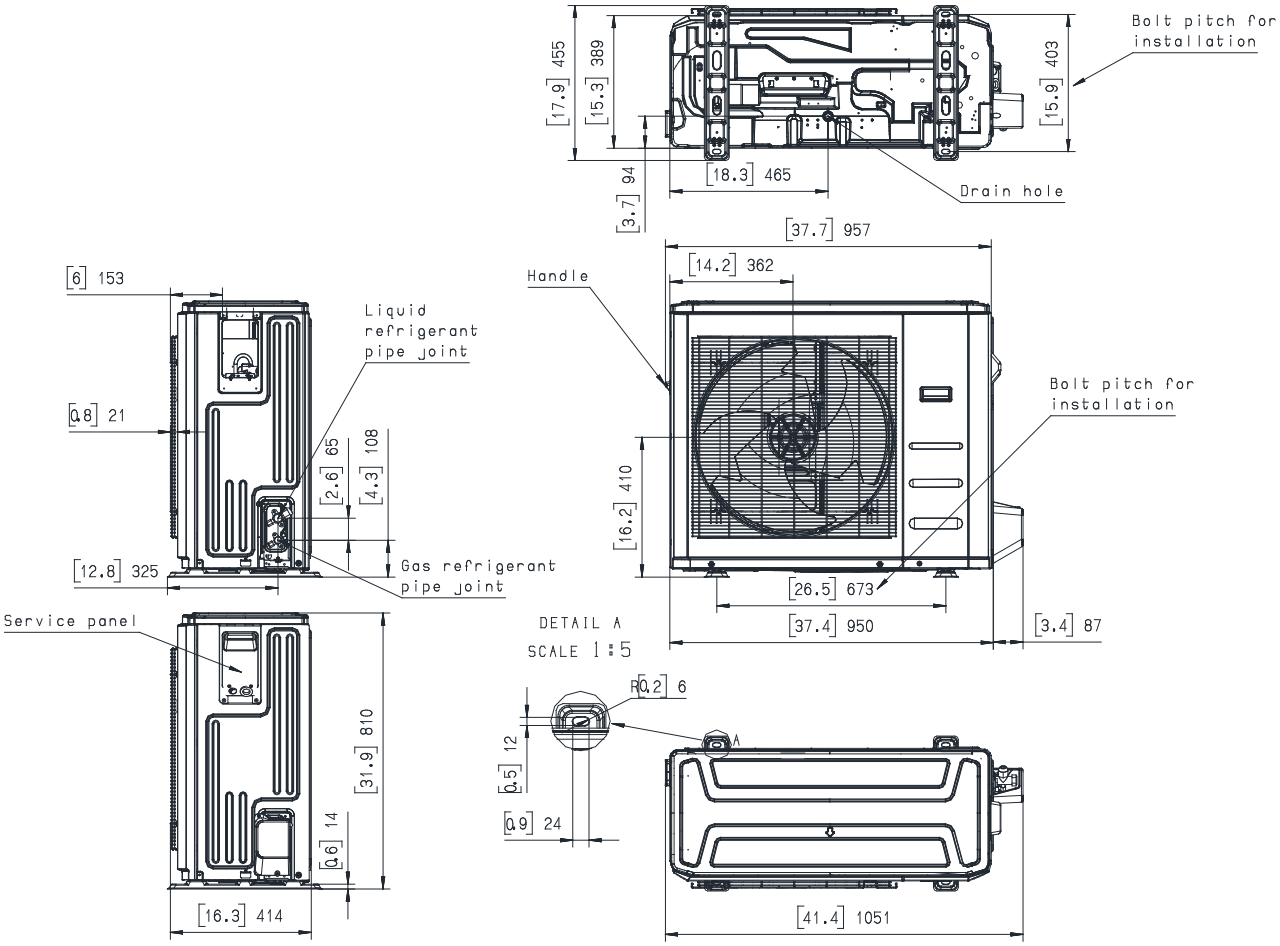

X630 Platform

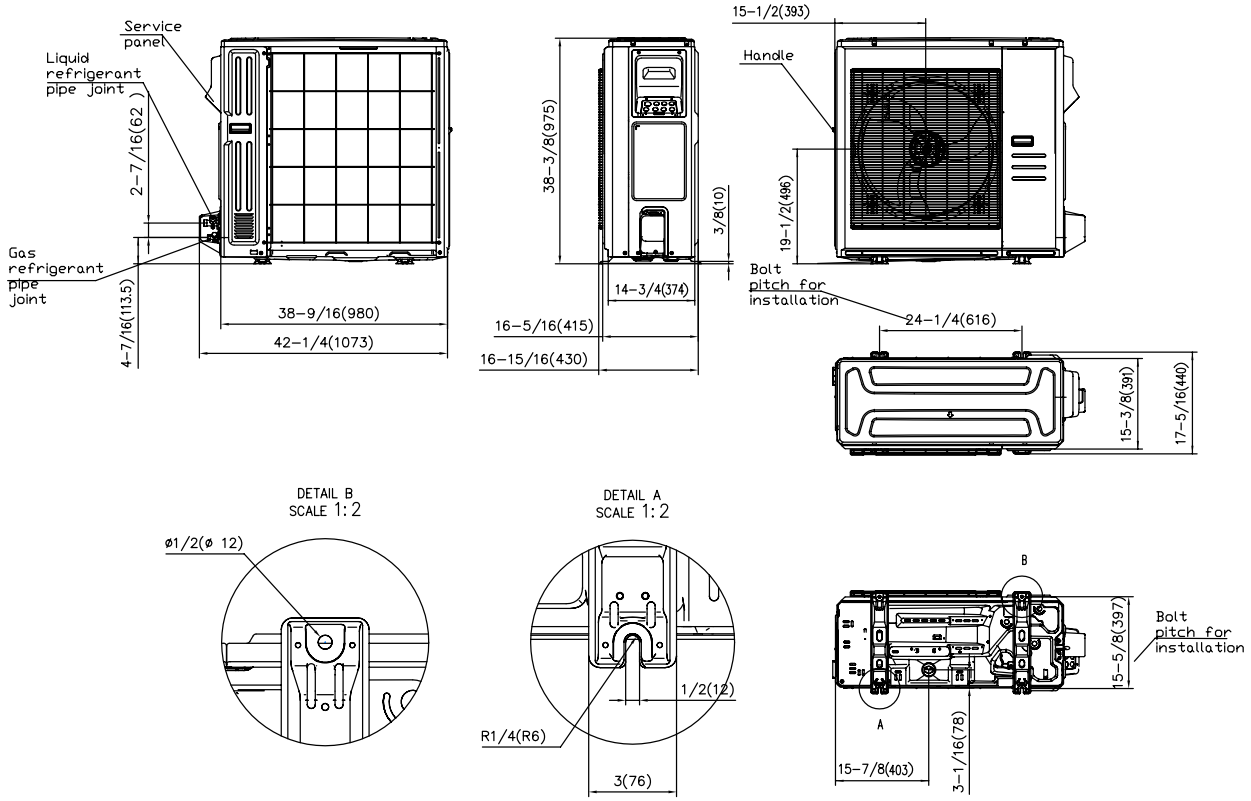

E30 Platform

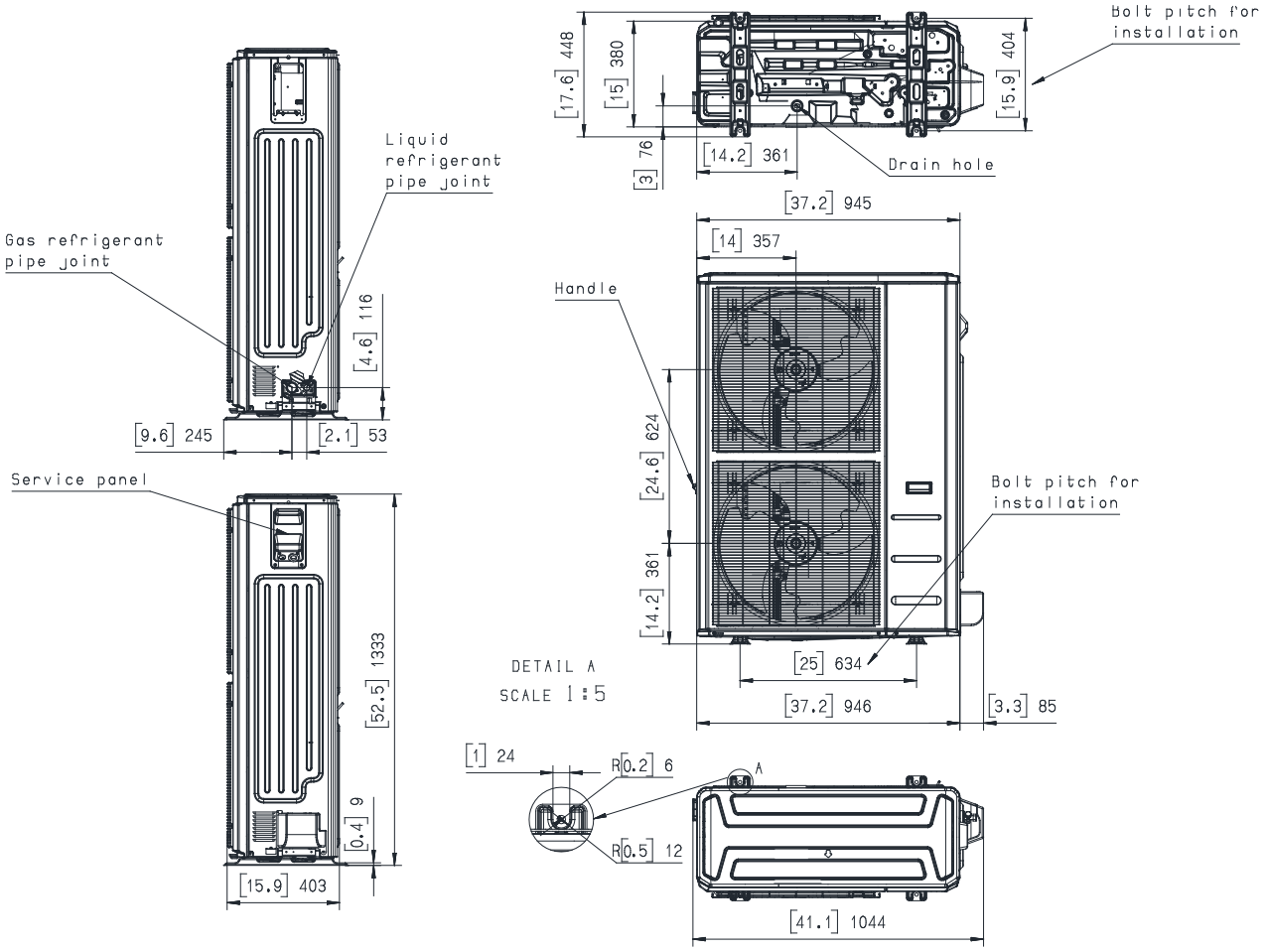

2. Installation location

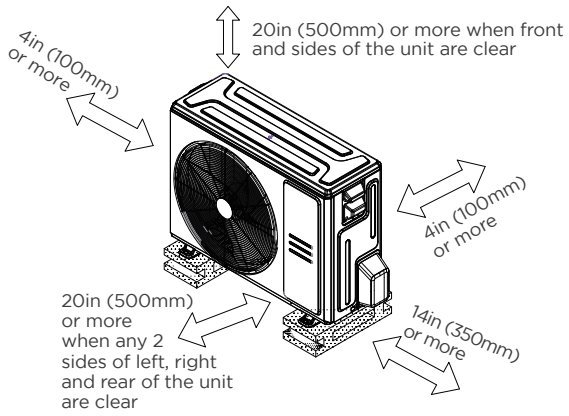

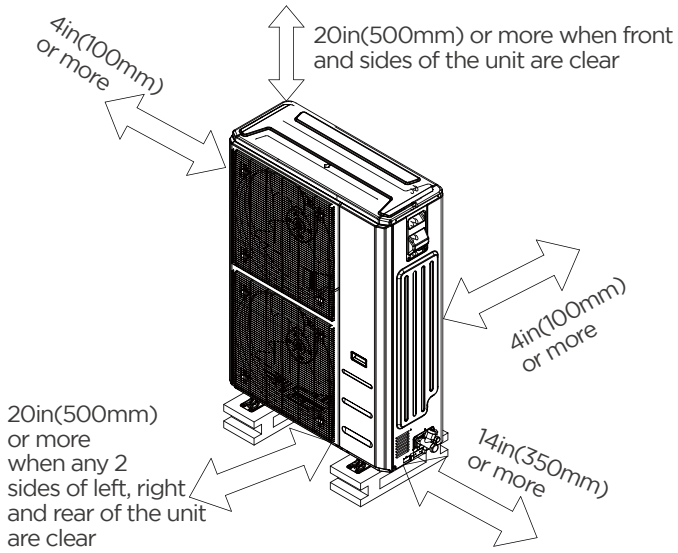

3. Capacity Correction Factor for Height Difference

Capacity(Btu/h)	18K		Pipe Length (ft/m)			
Indoor Upper than Outdoor			24.6/7.5	32.8/10	65.6/20	98.4/30
Height difference H (ft/m)	Cooling	65.6/20			0.941	0.919
		32.8/10		0.974	0.951	0.928
		16.4/5	0.995	0.983	0.960	0.937
		0	1.000	0.988	0.965	0.942
	Heating	65.6/20			0.987	0.978
		32.8/10		0.996	0.987	0.978
		16.4/5	1.000	0.996	0.987	0.978
		0	1.000	0.996	0.987	0.978
Outdoor Upper than Indoor			24.6/7.5	32.8/10	65.6/20	98.4/30
Height difference H (ft/m)	Cooling	0	1.000	0.988	0.965	0.942
		16.4/5	1.000	0.988	0.965	0.942
		32.8/10		0.988	0.965	0.942
		65.6/20			0.965	0.942
	Heating	0	1.000	0.996	0.987	0.978
		16.4/5	0.992	0.988	0.979	0.970
		32.8/10		0.980	0.971	0.962
		65.6/20			0.963	0.955

Capacity(Btu/h)	24K		Pipe Length (ft/m)					
Indoor Upper than Outdoor			24.6/7.5	32.8/10	65.6/20	98.4/30	131.2/40	164/50
Height difference H (ft/m)	Cooling	82.0/25				0.917	0.898	0.879
		65.6/20			0.946	0.926	0.907	0.887
		32.8/10		0.975	0.955	0.936	0.916	0.896
		16.4/5	0.995	0.985	0.965	0.945	0.925	0.905
		0	1.000	0.990	0.970	0.950	0.930	0.910
	Heating	82.0/25				0.984	0.978	0.972
		65.6/20			0.991	0.984	0.978	0.972
		32.8/10		0.997	0.991	0.984	0.978	0.972
		16.4/5	1.000	0.997	0.991	0.984	0.978	0.972
		0	1.000	0.997	0.991	0.984	0.978	0.972
Outdoor Upper than Indoor			24.6/7.5	32.8/10	65.6/20	98.4/30	131.2/40	164/50
Height difference H (ft/m)	Cooling	0	1.000	0.990	0.970	0.950	0.930	0.910
		16.4/5	1.000	0.990	0.970	0.950	0.930	0.910
		32.8/10		0.990	0.970	0.950	0.930	0.910
		65.6/20			0.970	0.950	0.930	0.910
		82.0/25				0.950	0.930	0.910
	Heating	0	1.000	0.997	0.991	0.984	0.978	0.972
		16.4/5	0.992	0.989	0.983	0.977	0.970	0.964
		32.8/10		0.981	0.975	0.969	0.963	0.957
		65.6/20			0.967	0.961	0.955	0.949
		82.0/25				0.953	0.947	0.941

Capacity(Btu/h)	30K		Pipe Length (ft/m)					
Indoor Upper than Outdoor			24.6/7.5	32.8/10	65.6/20	98.4/30	131.2/40	164/50
Height difference H (ft/m)	Cooling	82.0/25				0.891	0.862	0.832
		65.6/20			0.930	0.900	0.871	0.841
		32.8/10		0.970	0.940	0.910	0.879	0.849
		16.4/5	0.995	0.980	0.949	0.919	0.888	0.858
		0	1.000	0.985	0.954	0.923	0.893	0.862
	Heating	82.0/25				0.961	0.945	0.929
		65.6/20			0.976	0.961	0.945	0.929
		32.8/10		0.992	0.976	0.961	0.945	0.929
		16.4/5	1.000	0.992	0.976	0.961	0.945	0.929
		0	1.000	0.992	0.976	0.961	0.945	0.929
Outdoor Upper than Indoor			24.6/7.5	32.8/10	65.6/20	98.4/30	131.2/40	164/50
Height difference H (ft/m)	Cooling	0	1.000	0.985	0.954	0.923	0.893	0.862
		16.4/5	1.000	0.985	0.954	0.923	0.893	0.862
		32.8/10		0.985	0.954	0.923	0.893	0.862
		65.6/20			0.954	0.923	0.893	0.862
		82.0/25				0.923	0.893	0.862
	Heating	0	1.000	0.992	0.976	0.961	0.945	0.929
		16.4/5	0.992	0.984	0.969	0.953	0.937	0.922
		32.8/10		0.976	0.961	0.945	0.930	0.914
		65.6/20			0.953	0.938	0.922	0.907
		82.0/25				0.930	0.915	0.900

Capacity(Btu/h)	36K		Pipe Length (ft/m)						
Indoor Upper than Outdoor			24.6/7.5	49.2/15	82.0/25	114.8/35	164/50	213.3/65	246/75
"Height difference H (ft/m)"	Cooling	98.4/30				0.889	0.851	0.812	0.787
		65.6/20			0.924	0.898	0.859	0.821	0.795
		32.8/10		0.959	0.933	0.907	0.868	0.829	0.803
		16.4/5	0.995	0.969	0.942	0.916	0.877	0.837	0.811
		0	1.000	0.974	0.947	0.921	0.881	0.841	0.815
	Heating	98.4/30				0.964	0.945	0.927	0.915
		65.6/20			0.976	0.964	0.945	0.927	0.915
		32.8/10		0.988	0.976	0.964	0.945	0.927	0.915
		16.4/5	1.000	0.988	0.976	0.964	0.945	0.927	0.915
		0	1.000	0.988	0.976	0.964	0.945	0.927	0.915
Outdoor Upper than Indoor			24.6/7.5	49.2/15	82.0/25	114.8/35	164/50	213.3/65	246/75
"Height difference H (ft/m)"	Cooling	0	1.000	0.974	0.947	0.921	0.881	0.841	0.815
		16.4/5	1.000	0.974	0.947	0.921	0.881	0.841	0.815
		32.8/10		0.974	0.947	0.921	0.881	0.841	0.815
		65.6/20			0.947	0.921	0.881	0.841	0.815
		98.4/30				0.921	0.881	0.841	0.815
	Heating	0	1.000	0.988	0.976	0.964	0.945	0.927	0.915
		16.4/5	0.992	0.980	0.968	0.956	0.938	0.920	0.908
		32.8/10		0.972	0.960	0.948	0.930	0.912	0.900
		65.6/20			0.952	0.941	0.923	0.905	0.893
		98.4/30				0.933	0.915	0.898	0.886

Capacity(Btu/h)	48K		Pipe Length (ft/m)						
Indoor Upper than Outdoor			24.6/7.5	49.2/15	82.0/25	114.8/35	164/50	213.3/65	246/75
Height difference H (ft/m)	Cooling	98.4/30				0.884	0.843	0.802	0.775
		65.6/20			0.920	0.893	0.852	0.811	0.783
		32.8/10		0.957	0.930	0.902	0.860	0.819	0.791
		16.4/5	0.995	0.967	0.939	0.911	0.869	0.827	0.799
		0	1.000	0.972	0.944	0.916	0.873	0.831	0.803
	Heating	98.4/30				0.958	0.936	0.915	0.901
		65.6/20			0.972	0.958	0.936	0.915	0.901
		32.8/10		0.986	0.972	0.958	0.936	0.915	0.901
		16.4/5	1.000	0.986	0.972	0.958	0.936	0.915	0.901
		0	1.000	0.986	0.972	0.958	0.936	0.915	0.901
Outdoor Upper than Indoor			24.6/7.5	49.2/15	82.0/25	114.8/35	164/50	213.3/65	246/75
Height difference H (ft/m)	Cooling	0	1.000	0.972	0.944	0.916	0.873	0.831	0.803
		16.4/5	1.000	0.972	0.944	0.916	0.873	0.831	0.803
		32.8/10		0.972	0.944	0.916	0.873	0.831	0.803
		65.6/20			0.944	0.916	0.873	0.831	0.803
		98.4/30				0.916	0.873	0.831	0.803
	Heating	0	1.000	0.986	0.972	0.958	0.936	0.915	0.901
		16.4/5	0.992	0.978	0.964	0.950	0.929	0.908	0.894
		32.8/10		0.970	0.956	0.942	0.921	0.901	0.887
		65.6/20			0.949	0.935	0.914	0.893	0.880
		98.4/30				0.927	0.907	0.886	0.873

Capacity (Btu/h)	60k		Pipe Length (ft/m)					
Cooling			24.6/7.5	15/49.2	82/25	35/114.8	164/50	246/75
Height difference H (ft/m)	Cooling	98.4/30				0.870	0.823	0.743
		65.6/20			0.911	0.879	0.831	0.751
		32.8/10		0.953	0.920	0.888	0.840	0.758
		16.4/5	0.995	0.962	0.930	0.897	0.848	0.766
		0	1.000	0.967	0.934	0.902	0.852	0.770
	Heating	98.4/30				0.955	0.932	0.894
		65.6/20			0.970	0.955	0.932	0.894
		32.8/10		0.985	0.970	0.955	0.932	0.894
		16.4/5	1.000	0.985	0.970	0.955	0.932	0.894
		0	1.000	0.985	0.970	0.955	0.932	0.894
Heating			24.6/7.5	15/49.2	82/25	35/114.8	164/50	246/75
Height difference H (ft/m)	Cooling	0	1.000	0.967	0.934	0.902	0.852	0.770
		16.4/5	1.000	0.967	0.934	0.902	0.852	0.770
		32.8/10		0.967	0.934	0.902	0.852	0.770
		65.6/20			0.934	0.902	0.852	0.770
		30/98.4				0.902	0.852	0.770
	Heating	0	1.000	0.985	0.970	0.955	0.932	0.894
		16.4/5	0.992	0.977	0.962	0.947	0.924	0.887
		32.8/10		0.969	0.954	0.939	0.917	0.880
		65.6/20			0.947	0.932	0.910	0.873
		30/98.4				0.924	0.902	0.866

4. Noise Criterion Curves

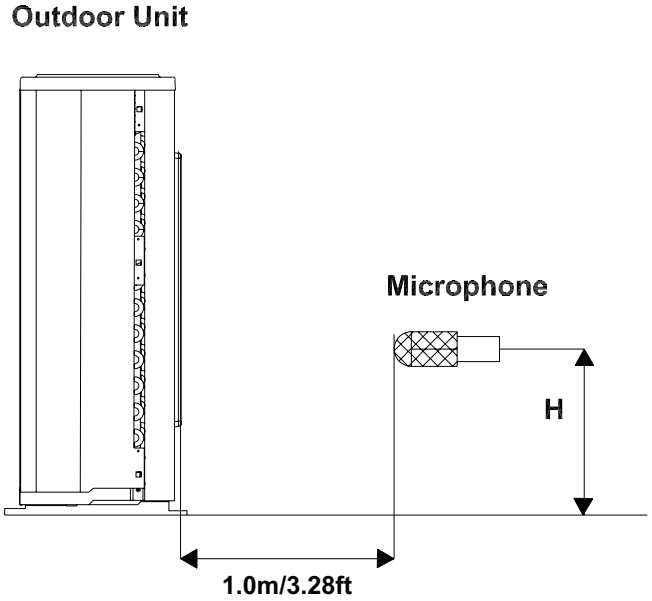

Note: H= 0.5 × height of outdoor unit

Notes:

-Sound measured at 1.0m/3.25ft away from the center of the unit.

-Data is valid at free field condition

-Data is valid at nominal operation condition

-Reference acoustic pressure OdB=20μPa

-Sound level will vary depending on arrange off actors such as the construction (acoustic absorption coefficient) of particular room in which the equipment is installed.

-The operating conditions are assumed to be standard.

MOX430-18HFN10-M3X

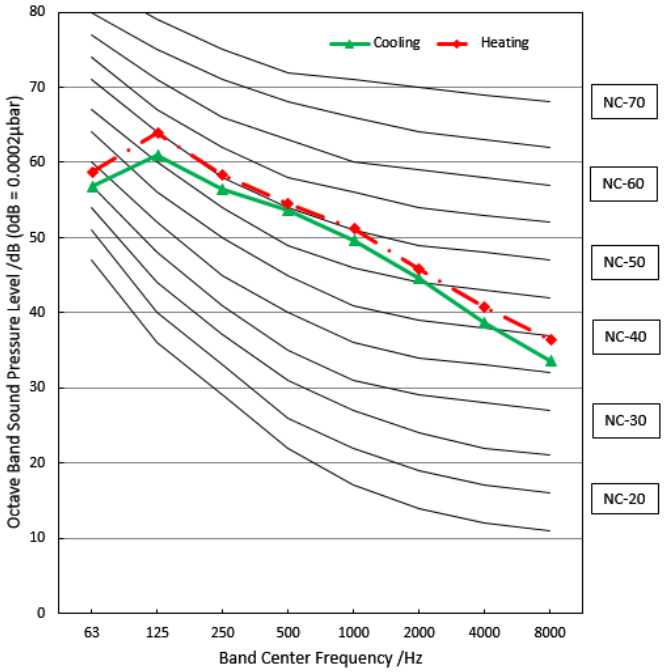

MOX330-18HFN10-M3

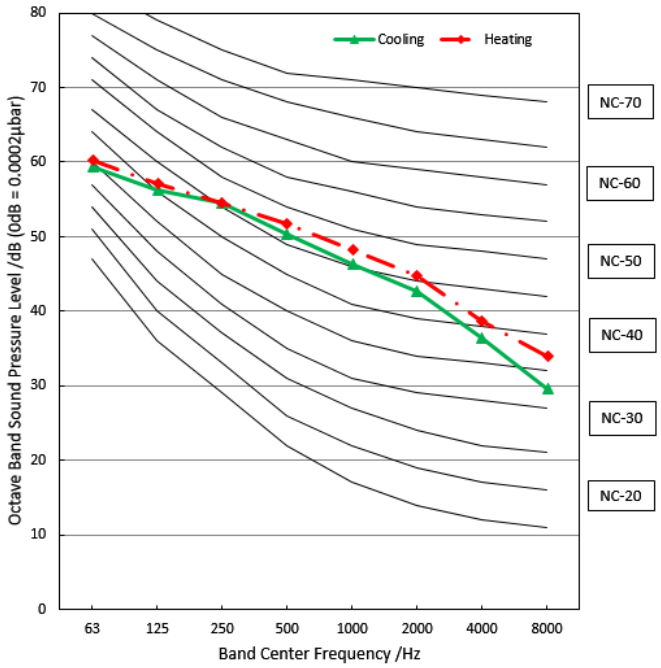

MOX430-24HFN10-M3X

MOX430-24HFN10-M3

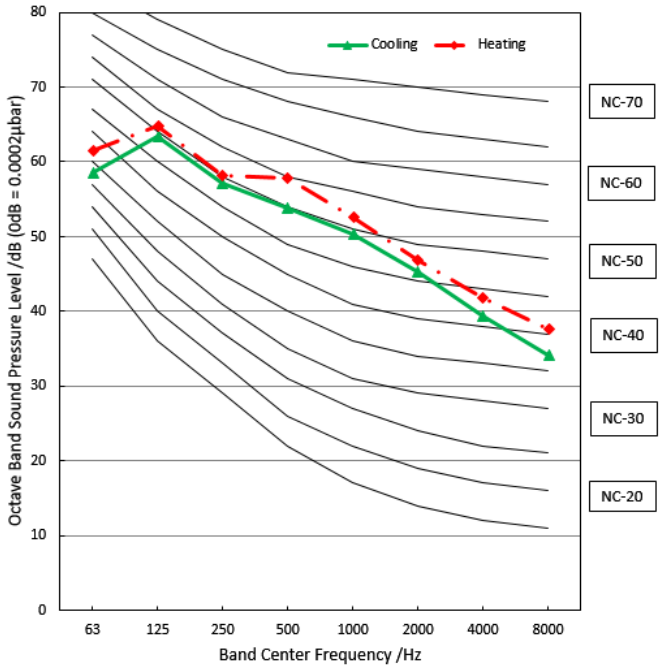

MOD30-30HFN10-M3

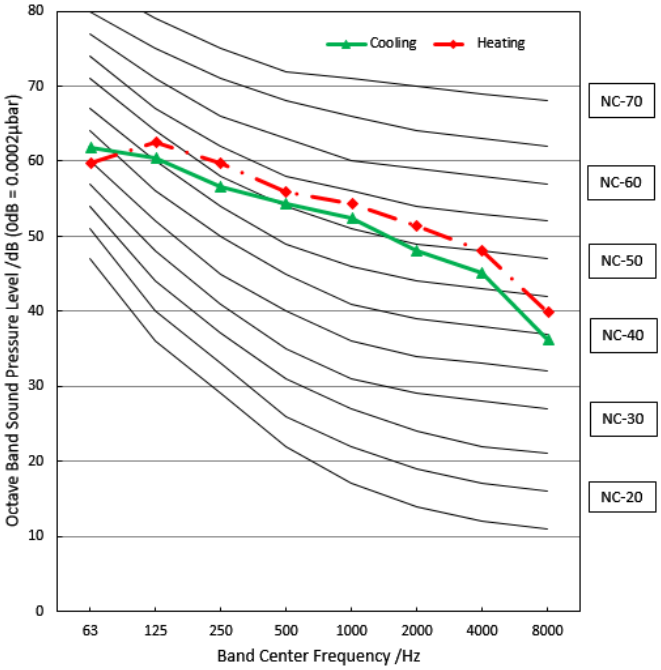

MOD30-30HFN10-M3X

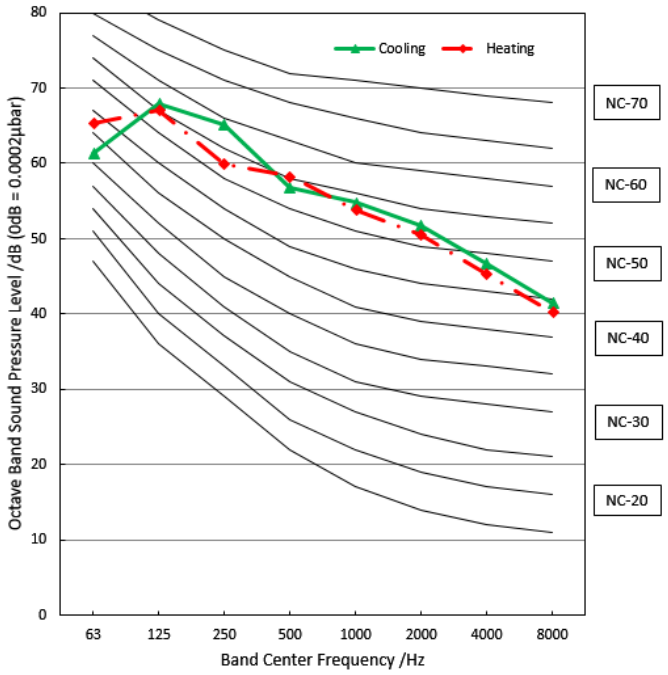

MOD30-36HFN10-M3

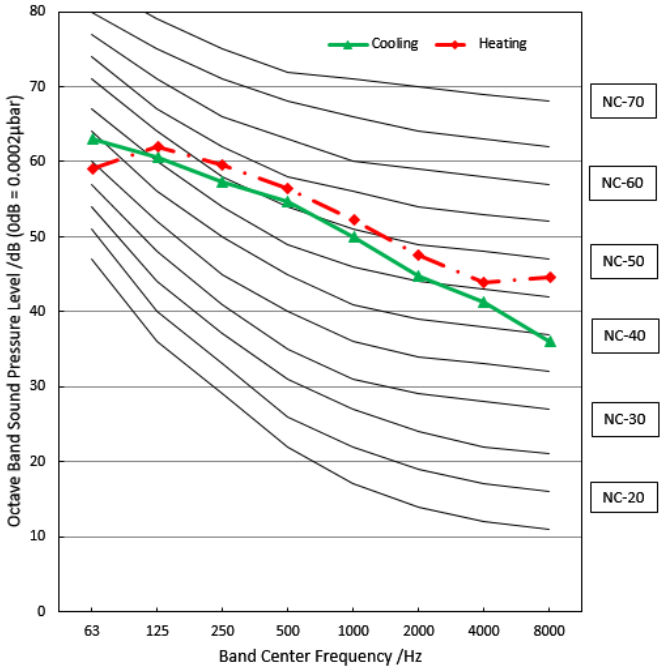

MOX630-36HFN10-M3X

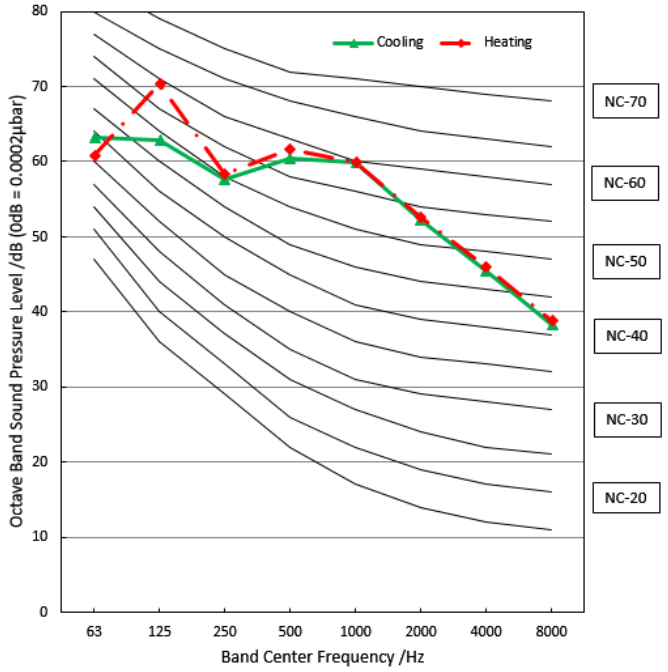

MOD30-36HFN10-M3X

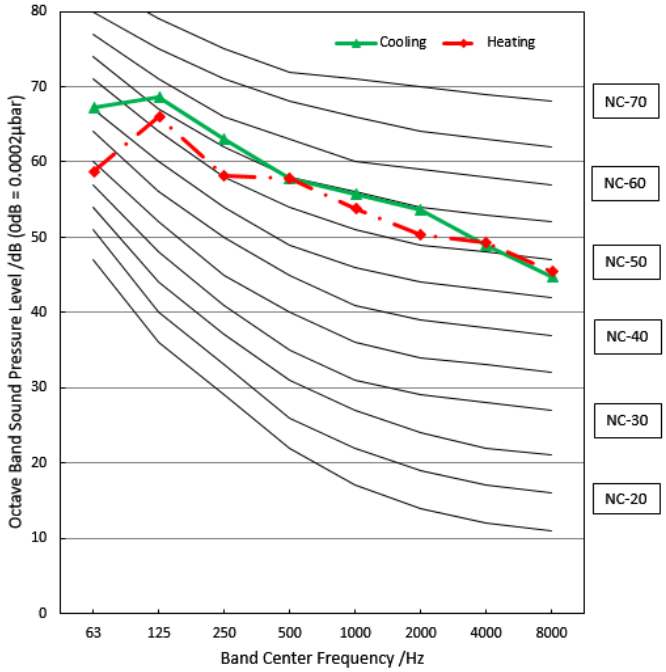

MOX630-48HFN10-M3

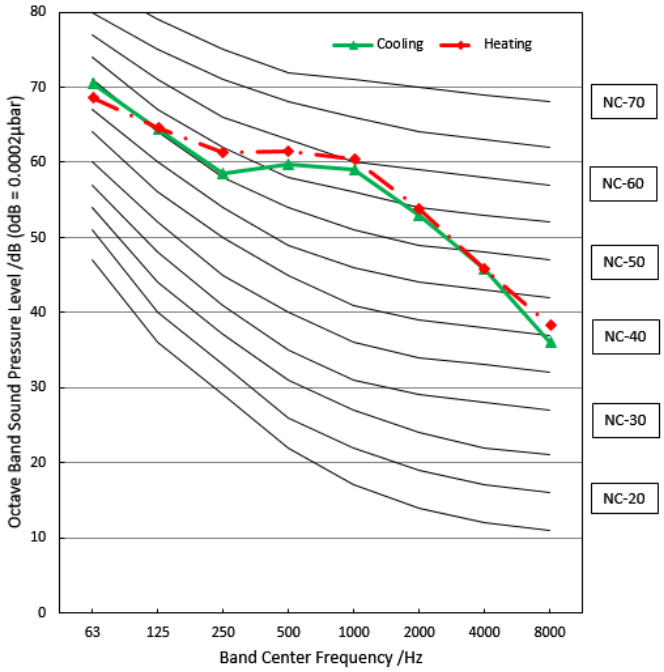

MOX630-48HFN10-M3X

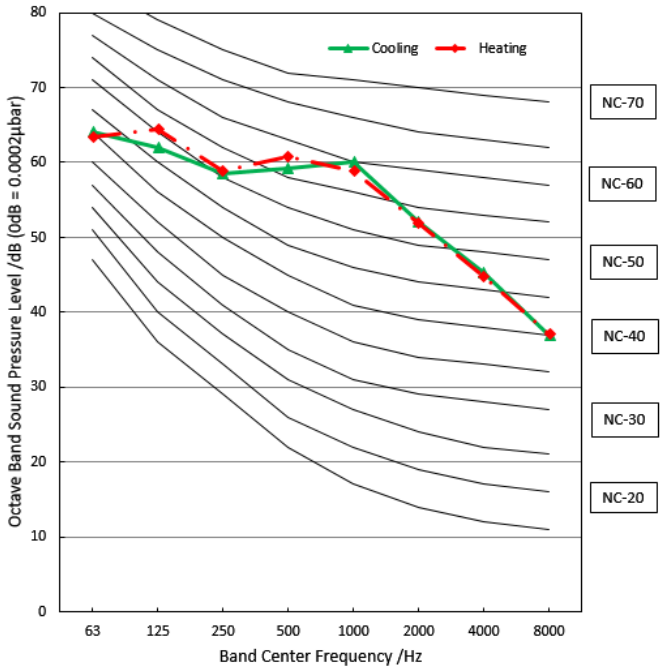

MOX630-60HFN10-M3

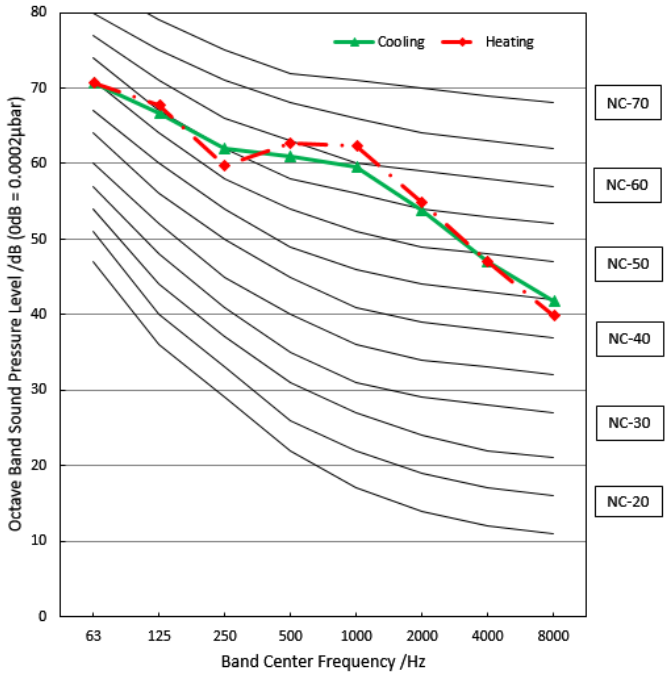

MOE30-60HFN10-M3X

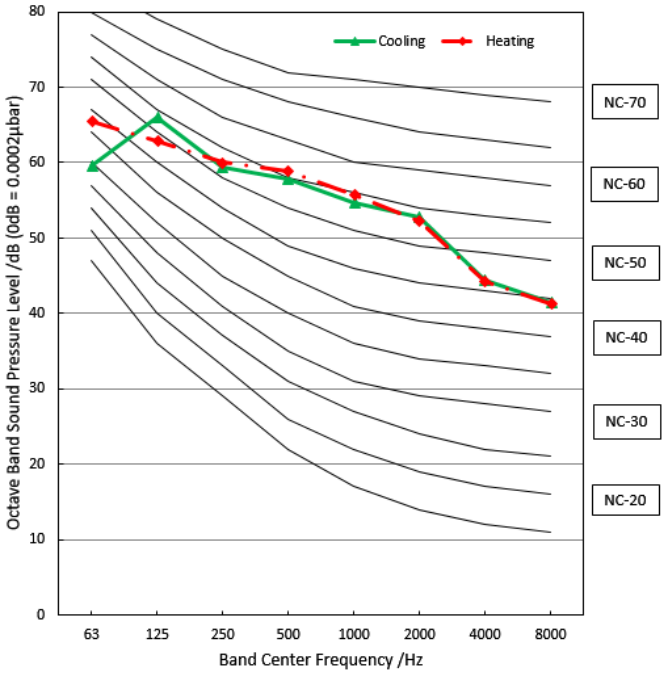

5. Refrigerant Cycle Diagrams

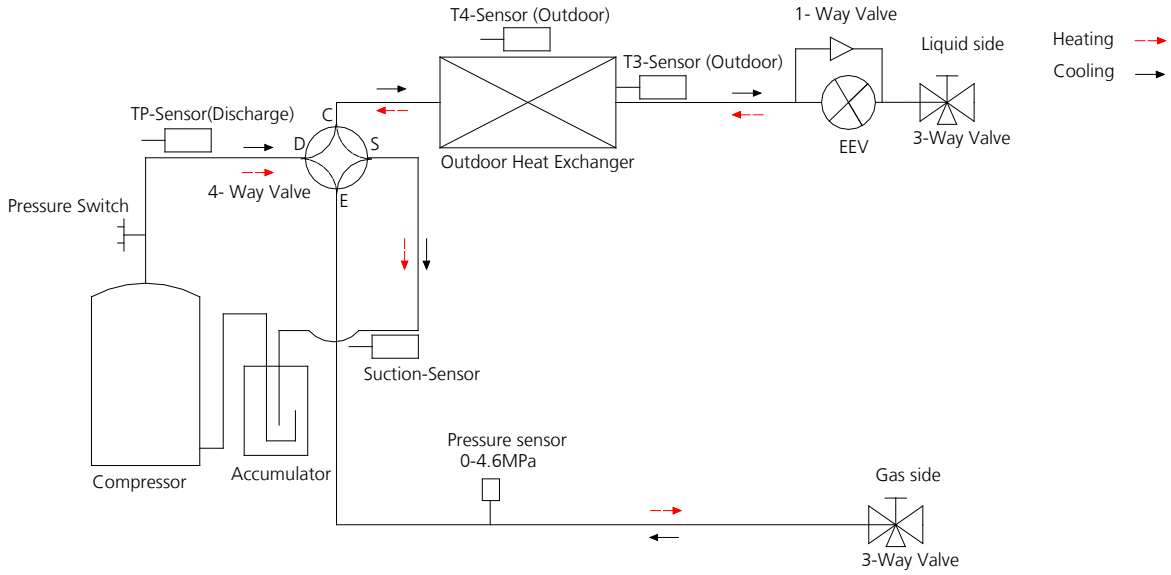

Model No.	Pipe Size (Diameter:ø) inch(mm)		Piping length (ft/m)		Elevation (ft/m)		Additional Refrigerant
	Gas	Liquid	Rated	Max.	Rated	Max.	
MOX330-18HFN10-M3	19(3/4)	3/8(9.52)	24.6/7.5	98.4/30	0	65.6/20	0.7oz/ft (65g/m)

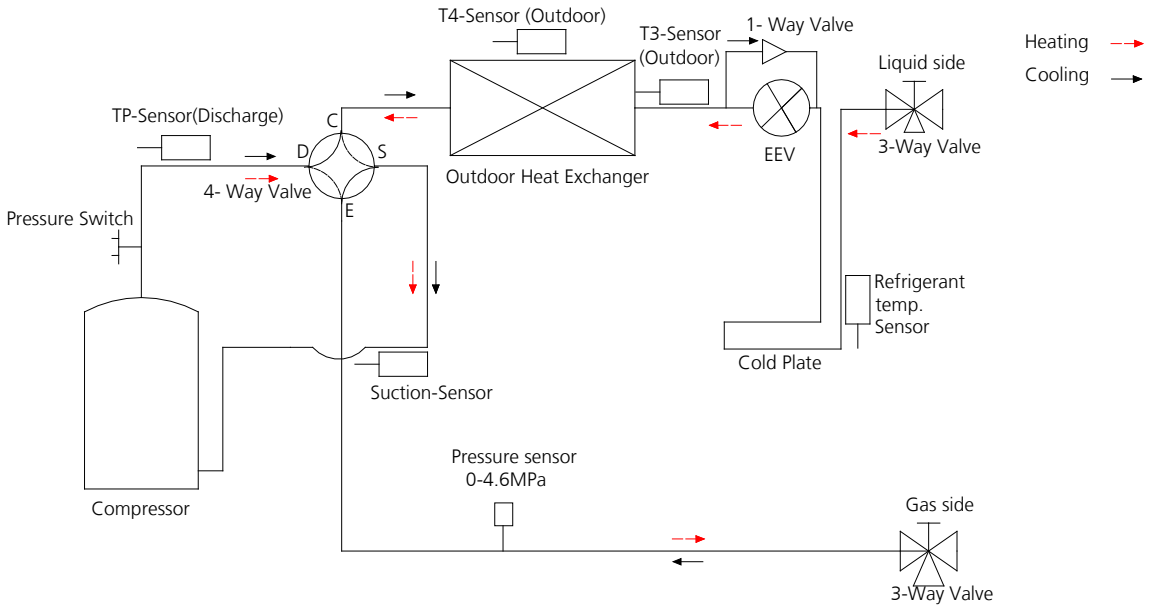

Model No.	Pipe Size (Diameter:ø) inch(mm)		Piping length (ft/m)		Elevation (ft/m)		Additional Refrigerant
	Gas	Liquid	Rated	Max.	Rated	Max.	
MOD30-30HFN10-M3	19(3/4)	3/8(9.52)	24.6/7.5	164/50	0	82/25	0.7oz/ft (65g/m)

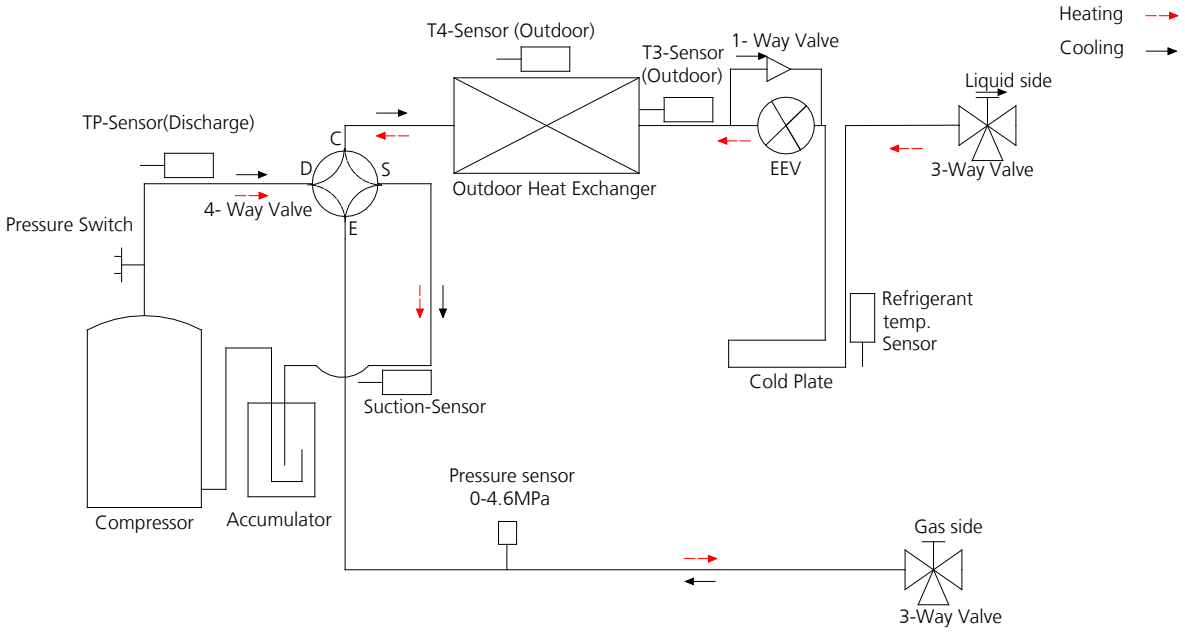

Model No.	Pipe Size (Diameter:ø) inch(mm)		Piping length (ft/m)		Elevation (ft/m)		Additional Refrigerant
	Gas	Liquid	Rated	Max.	Rated	Max.	
MOX430-18HFN10-M3X	19(3/4)	3/8(9.52)	24.6/7.5	98.4/30	0	65.6/20	0.7oz/ft (65g/m)
MOX430-24HFN10-M3	19(3/4)	3/8(9.52)	24.6/7.5	164/50	0	82/25	
MOX430-24HFN10-M3X	19(3/4)	3/8(9.52)	24.6/7.5	164/50	0	82/25	
MOD30-36HFN10-M3	19(3/4)	3/8(9.52)	24.6/7.5	246/75	0	98.4/30	
MOD30-30HFN10-M3X	19(3/4)	3/8(9.52)	24.6/7.5	164/50	0	82/25	
MOD30-36HFN10-M3X	19(3/4)	3/8(9.52)	24.6/7.5	246/75	0	98.4/30	
MOX630-48HFN10-M3	19(3/4)	3/8(9.52)	24.6/7.5	246/75	0	98.4/30	
MOX630-48HFN10-M3X	19(3/4)	3/8(9.52)	24.6/7.5	246/75	0	98.4/30	
MOX630-60HFN10-M3	19(3/4)	3/8(9.52)	24.6/7.5	246/75	0	98.4/30	

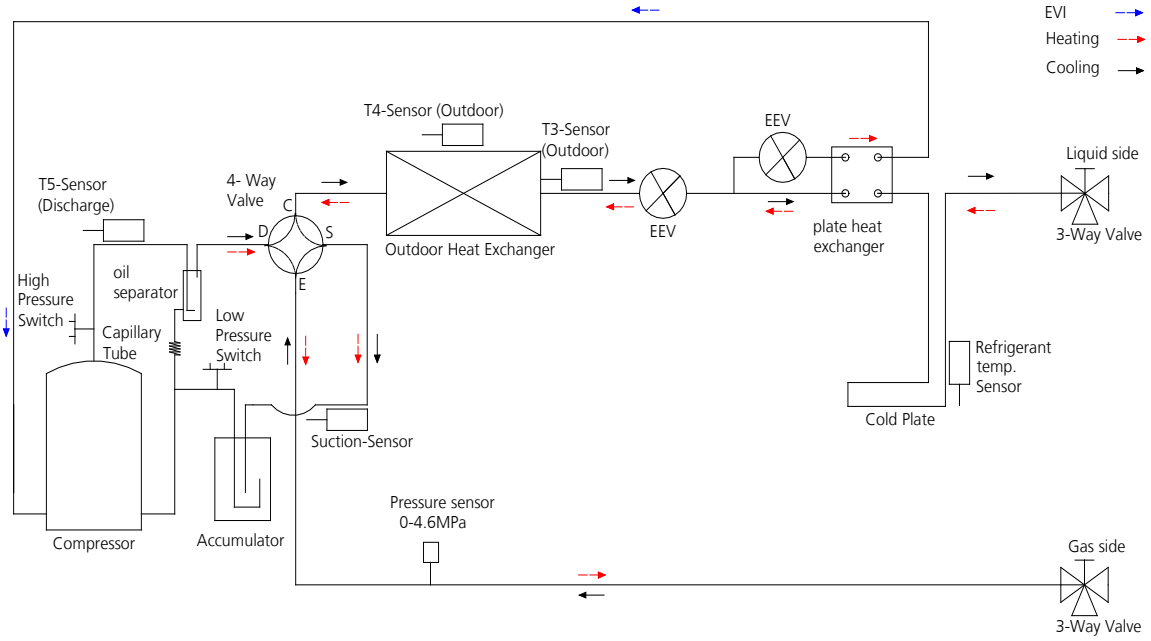

Model No.	Pipe Size (Diameter:ø) inch(mm)		Piping length (ft/m)		Elevation (ft/m)		Additional Refrigerant
	Gas	Liquid	Rated	Max.	Rated	Max.	
MOX630-36HFN10-M3X	19(3/4)	3/8(9.52)	24.6/7.5	246/75	0	98.4/30	0.7oz/ft (65g/m)
MOE30-60HFN10-M3X	19(3/4)	3/8(9.52)	24.6/7.5	246/75	0	98.4/30	

6. Electrical Wiring Diagrams

ODU Model	ODU Wiring Diagram	ODU Main Printed Circuit Board	24V Printed Board
MOX330-18HFN10-M3	16022000040910	17122000057661	17122000062325
MOX430-18HFN10-M3X	16022000040710	17122000048064	
MOX430-24HFN10-M3	16022000040710		
MOX430-24HFN10-M3X	16022000040710		
MOD30-30HFN10-M3	16022000040690	17122300007152	
MOD30-36HFN10-M3	16022000041438		
MOD30-30HFN10-M3X	16022000041438		
MOX630-36HFN10-M3X	16022000041477		
MOD30-36HFN10-M3X	16022000041438		
MOX630-48HFN10-M3	16022000041477		
MOX630-48HFN10-M3X	16022000041477		
MOX630-60HFN10-M3	16022000041438		
MOE30-60HFN10-M3X	16022000041440		

Outdoor unit wiring diagram:16022000040910

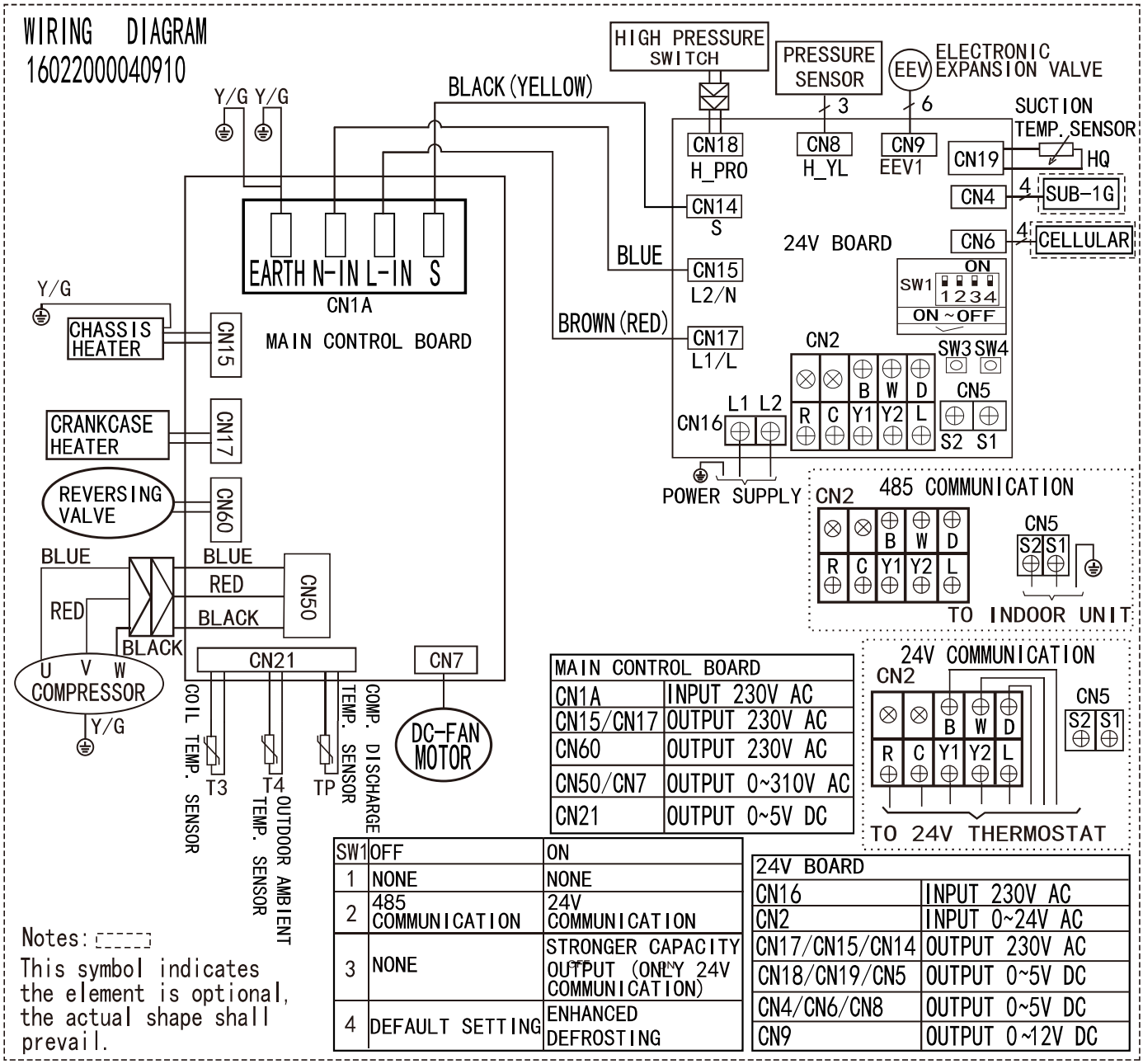

MAIN CONTROL BOARD	
CN1A	INPUT 230V AC
CN15/CN17	OUTPUT 230V AC
CN60	OUTPUT 230V AC
CN50/CN7	OUTPUT 0~310V AC
CN21	OUTPUT 0~5V DC

SW1	OFF	ON
1	NONE	NONE
2	485 COMMUNICATION	24V COMMUNICATION
3	NONE	STRONGER CAPACITY OUTPUT (ONLY 24V COMMUNICATION)
4	DEFAULT SETTING	ENHANCED DEFROSTING

24V BOARD	
CN16	INPUT 230V AC
CN2	INPUT 0~24V AC
CN17/CN15/CN14	OUTPUT 230V AC
CN18/CN19/CN5	OUTPUT 0~5V DC
CN4/CN6/CN8	OUTPUT 0~5V DC
CN9	OUTPUT 0~12V DC

Outdoor unit wiring diagram:16022000040710

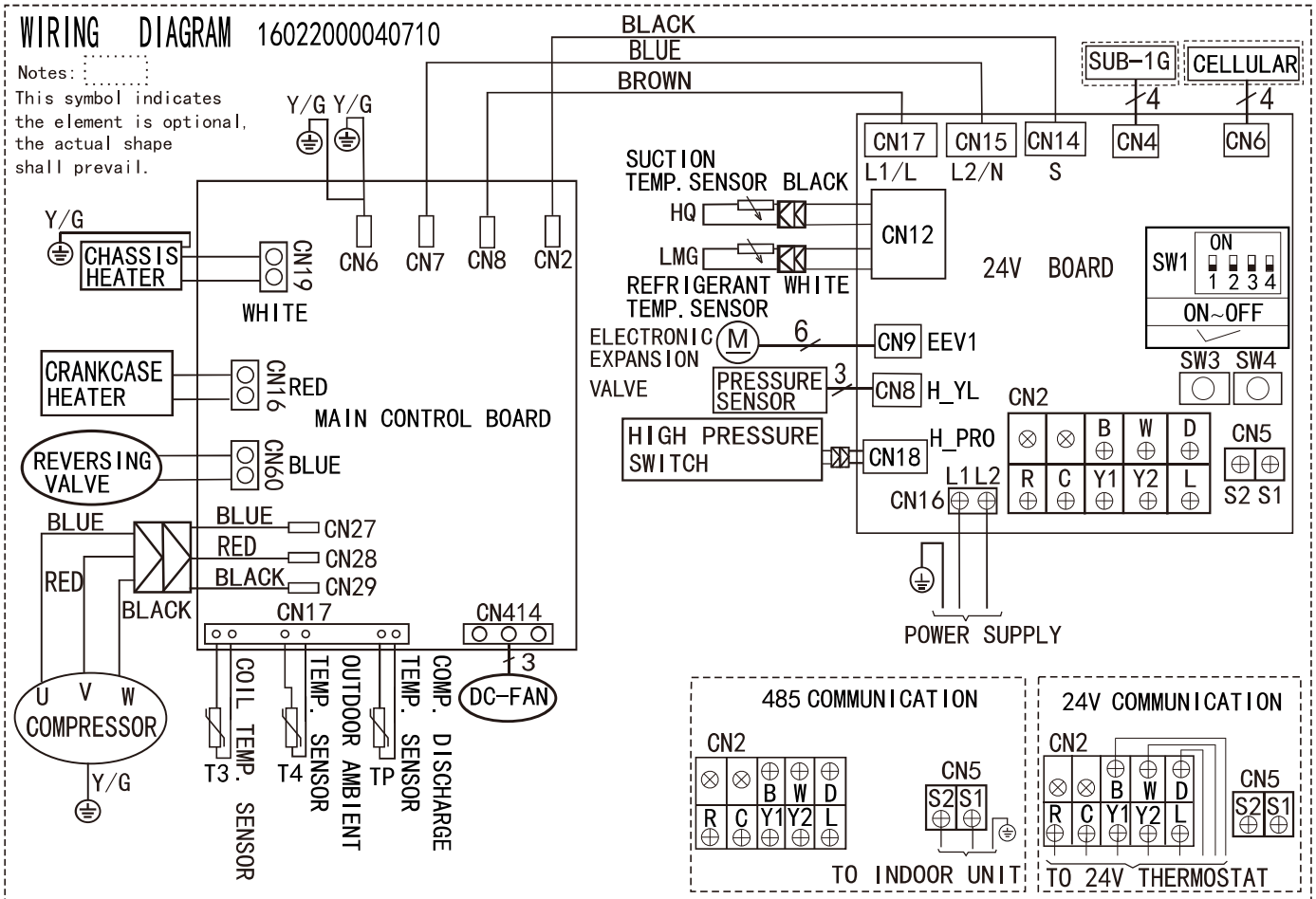

MAIN CONTROL BOARD		24V BOARD	
CN2/CN7/CN8	INPUT 230V AC	CN16	INPUT 230V AC
CN16	OUTPUT 230V AC	CN18/CN12/CN5	OUTPUT 0~5V DC
CN60	OUTPUT 230V AC	CN4/CN6/CN8	OUTPUT 0~5V DC
CN19	OUTPUT 230V AC	CN9	OUTPUT 0~12V DC
CN17	OUTPUT 0~5V DC	CN14/CN15/CN17	OUTPUT 230VAC
CN414	OUTPUT 0~310V AC		
CN27/CN28/CN29	OUTPUT 0~310V AC	CN2	INPUT 0~24VAC

SW1	OFF	ON
1	NONE	NONE
2	485 COMMUNICATION	24V COMMUNICATION
3	NONE	STRONGER CAPACITY OUTPUT (ONLY 24V COMMUNICATION)
4	DEFAULT SETTING	ENHANCED DEFROSTING

Outdoor unit wiring diagram:16022000040690

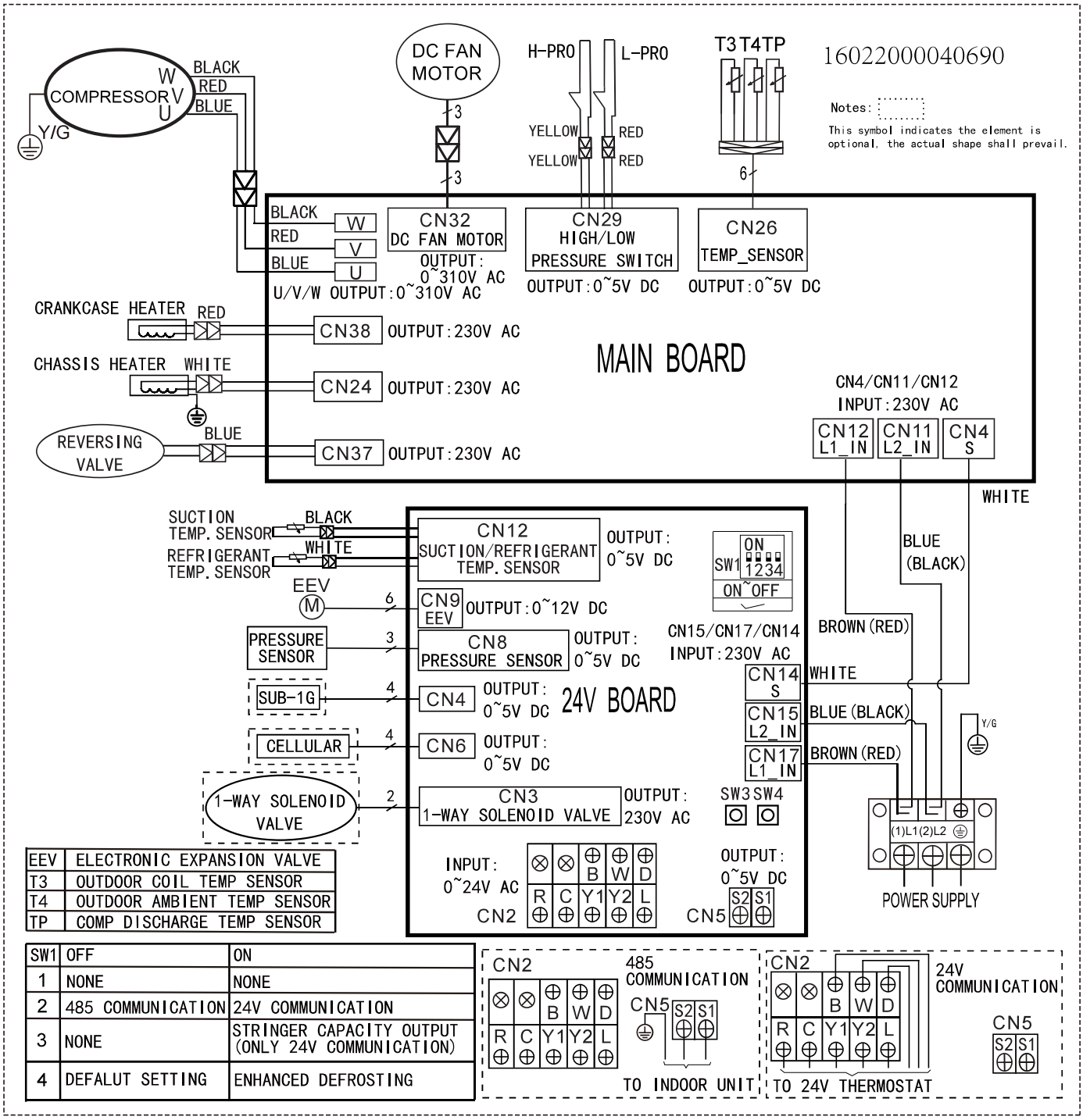

EEV	ELECTRONIC EXPANSION VALVE
T3	OUTDOOR COIL TEMP SENSOR
T4	OUTDOOR AMBIENT TEMP SENSOR
TP	COMP DISCHARGE TEMP SENSOR

SW1	OFF	ON
1	NONE	NONE
2	485 COMMUNICATION	24V COMMUNICATION
3	NONE	STRINGER CAPACITY OUTPUT (ONLY 24V COMMUNICATION)
4	DEFALUT SETTING	ENHANCED DEFROSTING

Outdoor unit wiring diagram:16022000041438

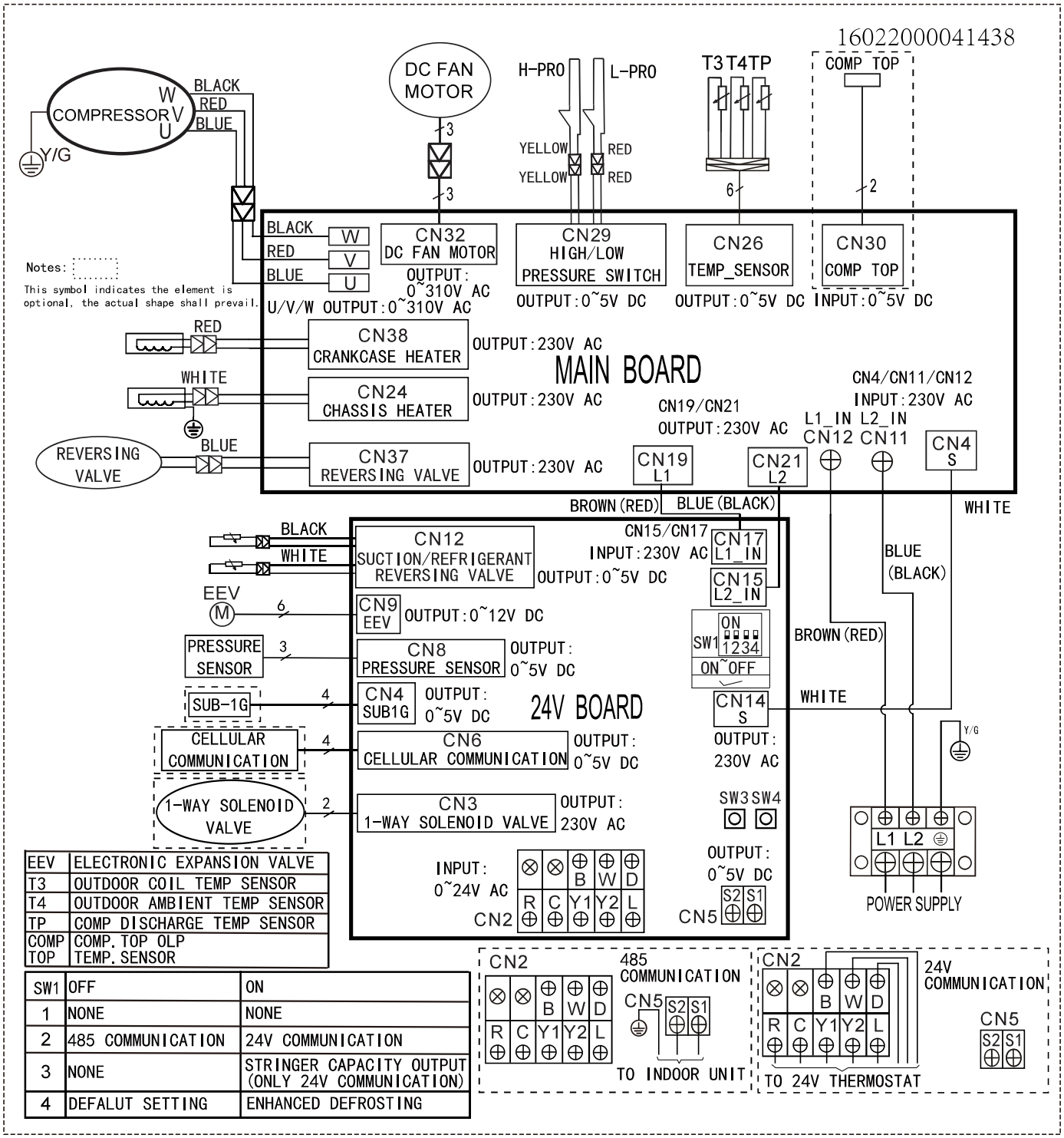

EEV	ELECTRONIC EXPANSION VALVE
T3	OUTDOOR COIL TEMP SENSOR
T4	OUTDOOR AMBIENT TEMP SENSOR
TP	COMP DISCHARGE TEMP SENSOR
COMP TOP	COMP. TOP OLP TEMP. SENSOR

SW1	OFF	ON
1	NONE	NONE
2	485 COMMUNICATION	24V COMMUNICATION
3	NONE	STRINGER CAPACITY OUTPUT (ONLY 24V COMMUNICATION)
4	DEFALUT SETTING	ENHANCED DEFROSTING

Outdoor unit wiring diagram:16022000041477

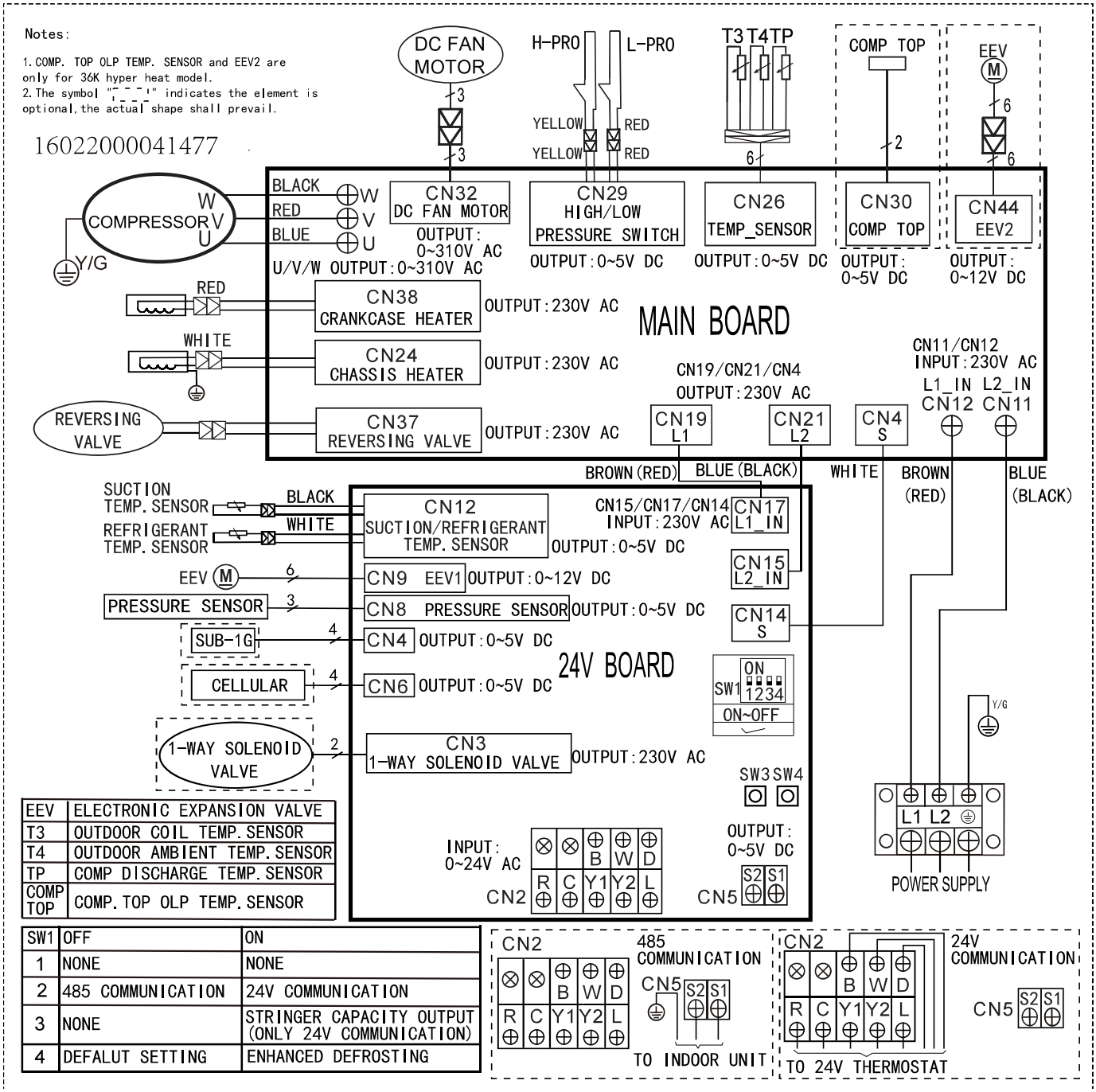

EEV	ELECTRONIC EXPANSION VALVE
T3	OUTDOOR COIL TEMP. SENSOR
T4	OUTDOOR AMBIENT TEMP. SENSOR
TP	COMP DISCHARGE TEMP. SENSOR
COMP TOP	COMP. TOP OLP TEMP. SENSOR

SW1	OFF	ON
1	NONE	NONE
2	485 COMMUNICATION	24V COMMUNICATION
3	NONE	STRINGER CAPACITY OUTPUT (ONLY 24V COMMUNICATION)
4	DEFALUT SETTING	ENHANCED DEFROSTING

Outdoor unit wiring diagram:16022000041440

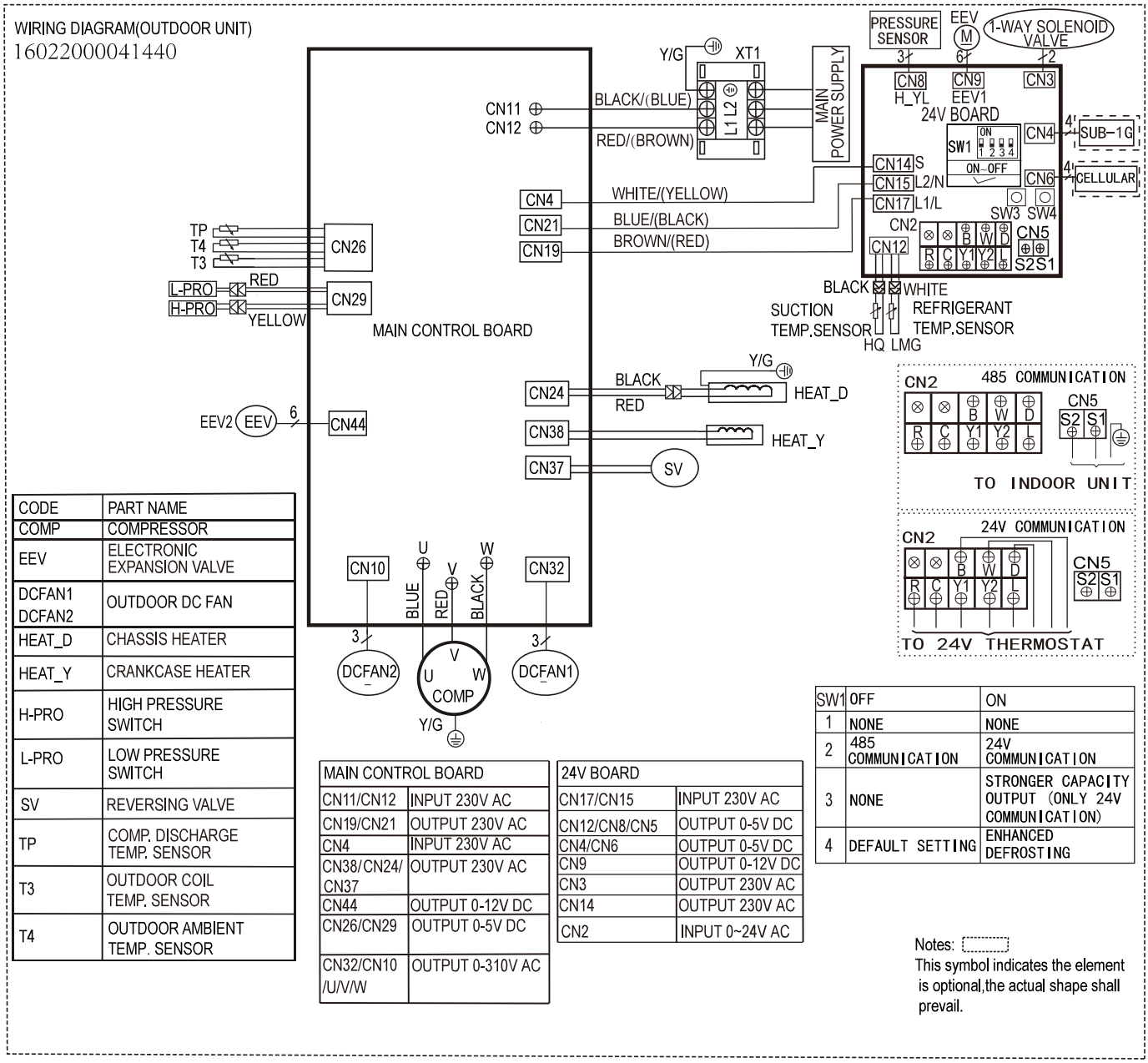

CODE	PART NAME
COMP	COMPRESSOR
EEV	ELECTRONIC EXPANSION VALVE
DCFAN1 DCFAN2	OUTDOOR DC FAN
HEAT_D	CHASSIS HEATER
HEAT_Y	CRANKCASE HEATER
H-PRO	HIGH PRESSURE SWITCH
L-PRO	LOW PRESSURE SWITCH
SV	REVERSING VALVE
TP	COMP. DISCHARGE TEMP. SENSOR
T3	OUTDOOR COIL TEMP. SENSOR
T4	OUTDOOR AMBIENT TEMP. SENSOR

MAIN CONTROL BOARD	
CN11/CN12	INPUT 230V AC
CN19/CN21	OUTPUT 230V AC
CN4	INPUT 230V AC
CN38/CN24/ CN37	OUTPUT 230V AC
CN44	OUTPUT 0-12V DC
CN26/CN29	OUTPUT 0-5V DC
CN32/CN10 /U/V/W	OUTPUT 0-310V AC

24V BOARD	
CN17/CN15	INPUT 230V AC
CN12/CN8/CN5	OUTPUT 0-5V DC
CN4/CN6	OUTPUT 0-5V DC
CN9	OUTPUT 0-12V DC
CN3	OUTPUT 230V AC
CN14	OUTPUT 230V AC
CN2	INPUT 0~24V AC

SW1	OFF	ON
1	NONE	NONE
2	485 COMMUNICATION	24V COMMUNICATION
3	NONE	STRONGER CAPACITY OUTPUT (ONLY 24V COMMUNICATION)
4	DEFAULT SETTING	ENHANCED DEFROSTING

Notes: ⬚
This symbol indicates the element is optional,the actual shape shall prevail.

Outdoor unit printed circuit board diagram: 17122000057661

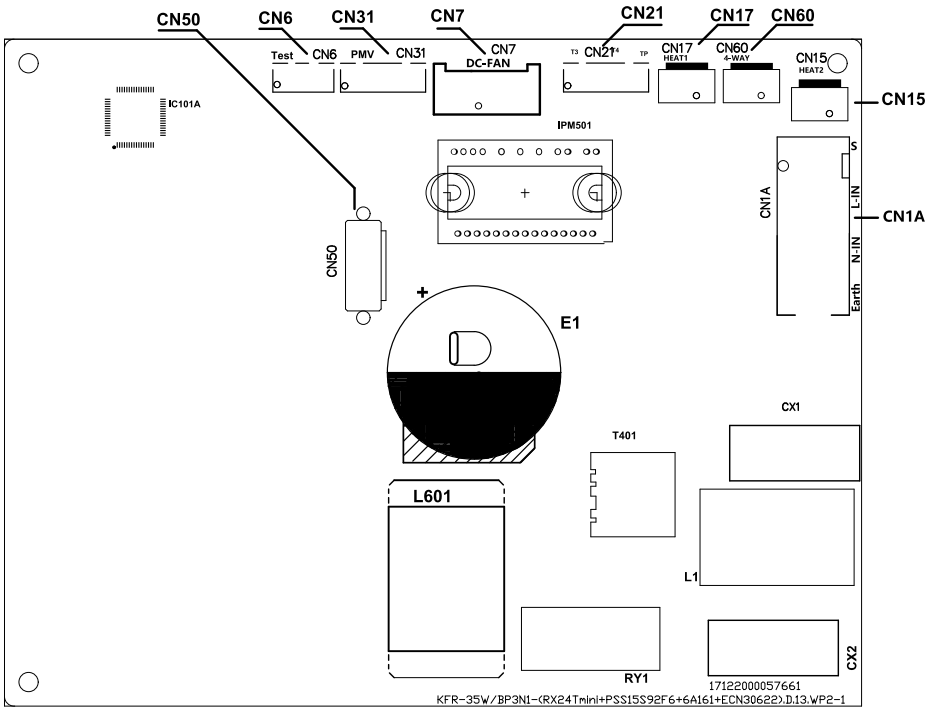

Port		Description	Parameter
CN50		Port for compressor	0-310V/AC
CN6		Port for test board	5V/DC
CN31		Power output for electronic expansion valve	12V/DC
CN7		Power output for DC fan	0-310V/AC
CN21		Power output for condenser (T3), ambient (T4) and discharge (Tp) temperature sensors	5V/DC
CN17		Power output for compressor heater	240V/AC
CN60		Power output for 4-way valve	240V/AC
CN15		Power output for chassis heater	240V/AC
CN1A	CN16	Port for communication cable S	
	CN2	Port for live wire	240V/AC
	CN1	Port for neutral wire	
	CN3	Port for earth wire	

Note: This pictures are only for reference, actual appearance may vary.

Outdoor unit printed circuit board diagram: 17122000048064_17122000048066

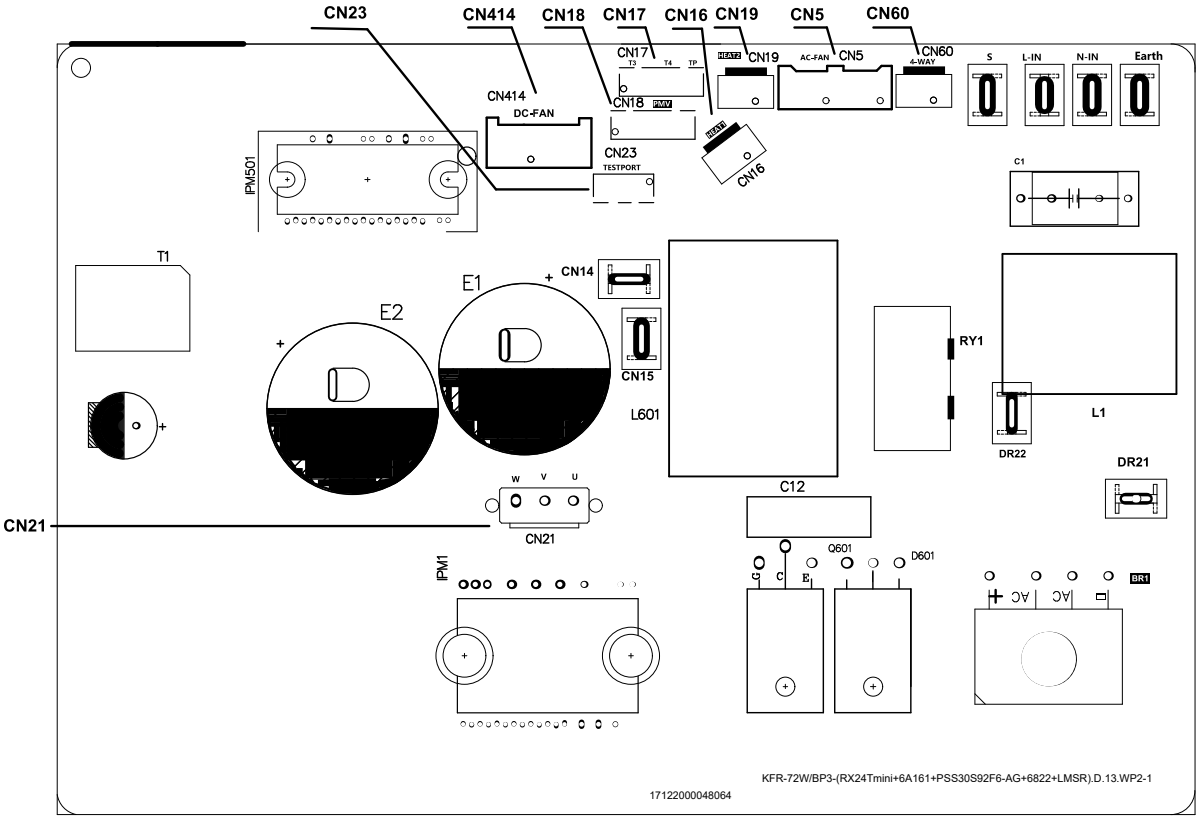

Port	Description	Parameter
CN23	Port for test board	5V/DC
CN414	Port for DC fan	0-310V/AC
CN18	Power output for electronic expansion valve	12V/DC
CN17	Power output for condenser (T3), ambient (T4) and discharge (Tp) temperature sensors	5V/DC
CN16	Power output for compressor heater	230V/AC
CN19	Power output for chassis heater	230V/AC
CN5	Power output for AC fan	230V/AC
CN60	Power output for 4-way valve	230V/AC
CN21	Port for compressor	0-310V/AC

Note: This pictures are only for reference, actual appearance may vary.

Outdoor unit printed circuit board diagram: 17122300007152

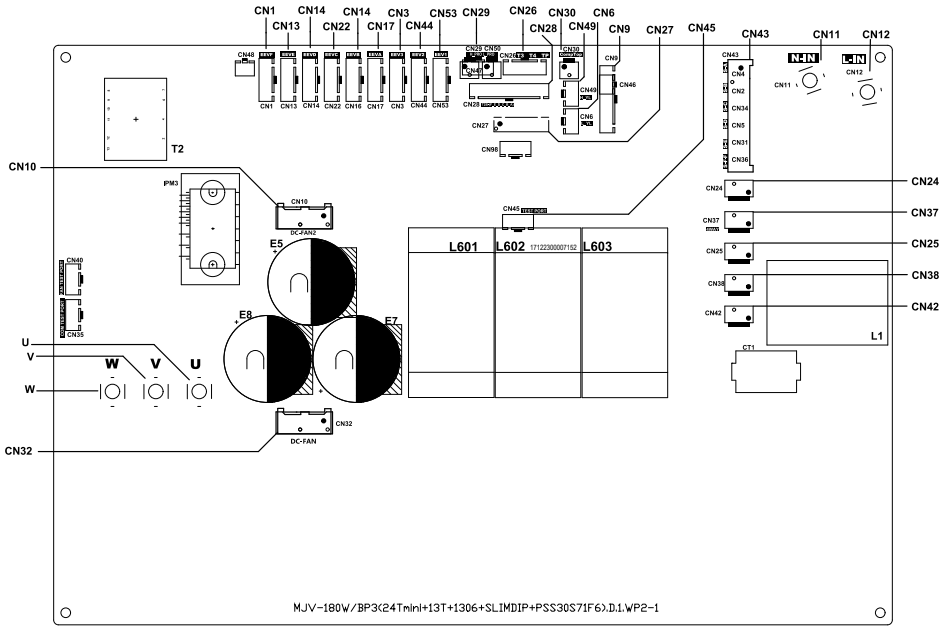

Port	Description	Parameter		Port	Description	Parameter
CN1, CN13, CN14, CN22, CN16, CN17, CN3, CN44, CN53	Power output for electronic expansion valve	12V/DC		CN43	Communication ports to indoor unit (S for A-F)	Input: 0~230V/AC
CN29	Port for high-pressure and low-pressure switches	Input: 5V/DC		CN11,12	Power input for this PCB	230V/AC
CN26	Power output for condenser(T3), ambient (T4) and discharge(TP) temperature sensors	5V/DC		CN24	Power output for chassis heater	230V/AC
CN28	Power output for evaporator (T2B) temperature sensor of IDU A-F	5V/DC		CN37	Power output for 4-way valve 1	230V/AC
CN30	Port for compressor top high temperature protector	Input: 5V/DC		CN25	Power output for 4-way valve 2	230V/AC
CN49/CN6	Port for Hi-pressure and low-pressure sensors	5V/DC		CN38	Power output for compressor heater	230V/AC
CN9	Power output for EVI temperature sensors (T5-T8)	5V/DC		CN42	Power output for 4-way valve 3	230V/AC
CN27	Communication port with key board	5V/DC		U, V, W	Output for compressor	0-310V/AC
CN45	Port for DR module (Test port)	5V/DC		CN32/CN10	Output for DC fan	0-310V/AC

Note: This pictures are only for reference, actual appearance may vary.

Outdoor unit printed circuit board diagram: 17122000062325

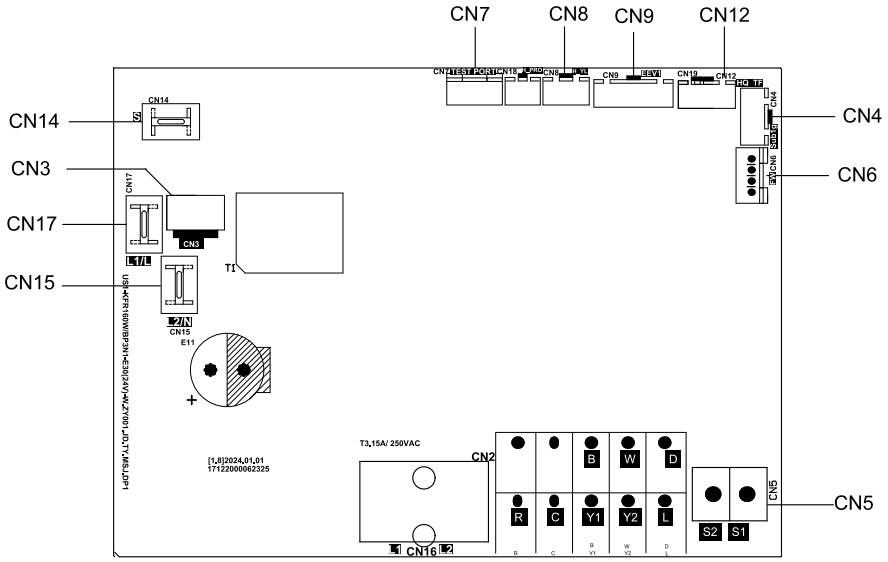

Port	Description	Parameter
CN15	Power input of L2/N-IN	230V/AC
CN17	Power input of L1-IN	230V/AC
CN3	Power output for one-way solenoid valve	230V/AC
CN14	Power input of communication cable S	230V/AC
CN7	Port for test board	5V/DC
CN8	Power output for pressure sensor	5V/DC
CN9	Power output for EEV	12V/DC
CN12	Power output for suction temp. sensor, refrigerant temp. sensor	5V/DC
CN4	Power output for SUB-1G	5V/DC
CN6	Power output for CELLULAR	5V/DC
CN5(S1+S2)	Port for indoor unit communication	5V/DC

Note: This section is for reference only. Please take practicality as standard.

Installation

Contents

1. Accessories
2. Location Selection
3. Outdoor Unit Installation
4. Refrigerant Pipe Installation
5. Vacuum Drying and Leakage Checking
6. Additional Refrigerant Charge
7. Engineering of Insulation
8. Engineering of Electrical Wiring
9. Test Operation

1. Accessories

Name	Shape	Quantity
Drain joint	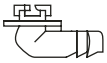	1
Seal		1

2. Location selection

2.1 Unit location selection can refer to installation manual.

2.2 DO NOT install the unit in the following locations:

- Near an obstacle that will block air inlets and outlets.
- Near a public street, crowded areas, or where noise from the unit will disturb others..
- Near animals or plants that will be harmed by hot air discharge.
- Near any source of combustible gas.
- In a location that is exposed to large amounts of dust
- In a location exposed to a excessive amounts of salty air.

2.3 Meets all spatial requirements shown in Installation Clearance Requirements below.

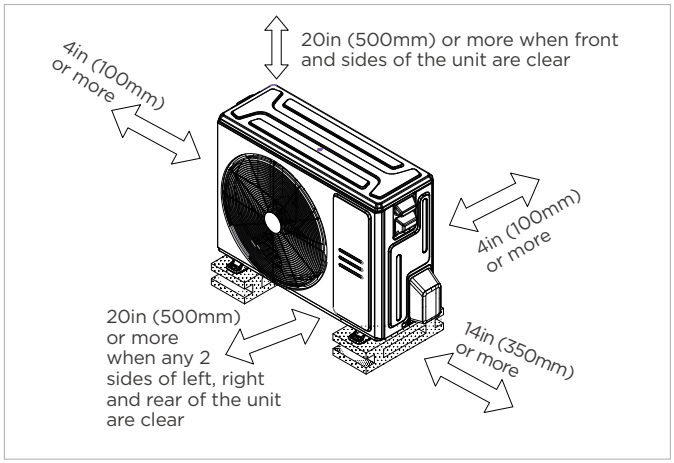

2.4 Rows of series installation

The relations between H, A and L are as follows.

	L	A
L ≤ H	L ≤ 1/2H	9.8in (25cm) or more
	1/2H < L ≤ H	11.8in (30cm) or more
L > H	Can not be installed	

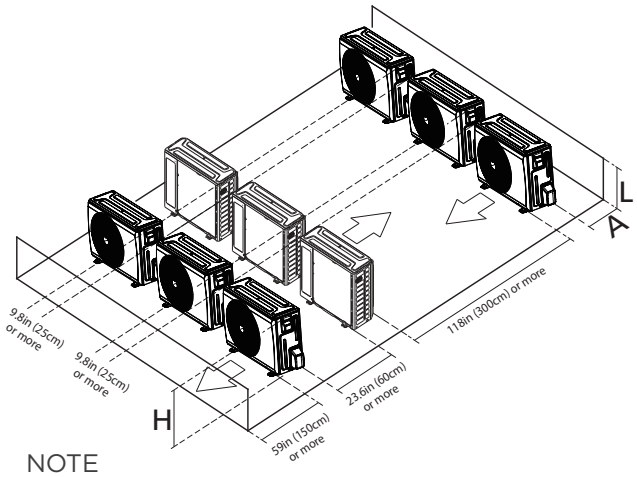

NOTE
H: Unit height
L: Height of the wall behind the unit
A: Distance between unit and wall

2.5 If the unit is exposed to heavy wind:

- Install unit so that air outlet fan is at a 90° angle to the direction of the wind. If needed, build a barrier in front of the unit to protect it from extremely heavy winds.

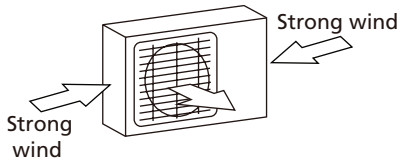

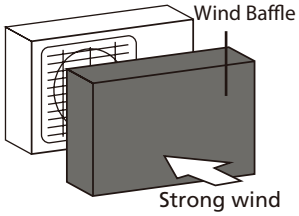

2.6 If the unit is frequently exposed to heavy rain or snow:

Build a shelter above the unit to protect it from the rain or snow. Be careful not to obstruct air flow around the unit.

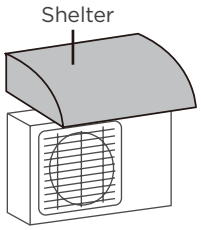

2.7 If the unit is frequently exposed to salty air (seaside):

Use outdoor unit that is specially designed to resist corrosion.

3. Outdoor unit installation

3.1 Install drain joint(Heat pump unit only)

Before bolting the outdoor unit in place, you must install the drain joint at the bottom of the unit.

Note that there are two different types of drain joints depending on the type of outdoor unit.

If the drain joint comes with a rubber seal(see Fig. A), do the following:

1. Fit the rubber seal on the end of the drain joint that will connect to the outdoor unit.

2. Insert the drain joint into the hole in the base pan of the unit.

3. Rotate the drain joint 90° until it clicks in place facing the front of the unit. **For some panel plates, you need to use tool.**

4. Connect a drain hose extension (not included) to the drain joint to redirect water from the unit during heating mode.

If the drain joint doesn't come with a rubber seal (see Fig. B), do the following:

1. Insert the drain joint into the hole in the base pan of the unit. The drain joint will click in place.

2. Connect a drain hose extension (not included) to the drain joint to redirect water from the unit during heating mode.

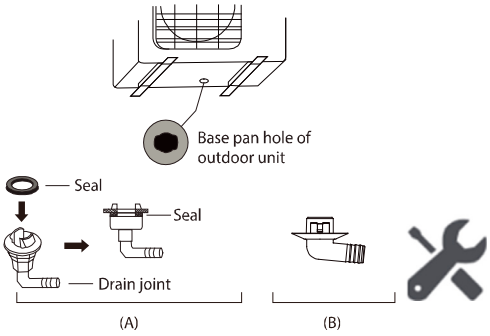

3.3 Anchor Outdoor Unit

The outdoor unit can be anchored to the ground or to a wall-mounted bracket with bolt(M10). Prepare the installation base of the unit according to the dimensions below.

The following is a list of diferent outdoor unit sizes and the distance between their mounting feet.

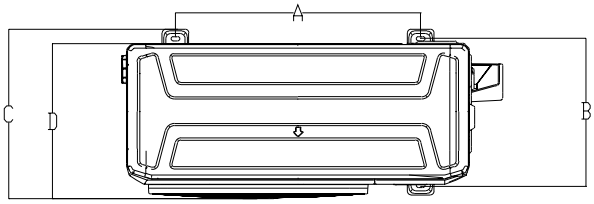

Platform	Unit	D	A	B	C
X3	inch	12.99	20.12	12.48	13.62
	mm	330	511	317	346
X4	inch	13.46	26.1	13.94	15.5
	mm	342	663	354	394
X6	inch	14.76	24.2	15.6	17.3
	mm	375	615	397	440
D30	inch	16.14	26.50	15.87	17.9
	mm	410	673	403	455
E30	inch	16.34	24.96	15.9	17.99
	mm	415	634	404	457

4. Refrigerant Pipe Installation

4.1 Maximum length and drop height

Ensure that the length of the refrigerant pipe, the number of bends, and the drop height between the indoor and outdoor units meets the requirements shown in the following table.

Capacity(Btu/h)	Max. Length (ft/m)	Max. Elevation (ft/m)
18k	98.4/30	65.6/20
24k/30k	164/50	82/25
36k/48k/60k	246/75	98.4/30

Caution:

1. The capacity test is based on the standard length and the maximum permissive length is based on the system reliability.

2. Oil traps

-If oil flows back into the outdoor unit's compressor, this might cause liquid compression or deterioration of oil return. Oil traps in the rising gas piping can prevent this.

-An oil trap should be installed every 20ft(6m) of vertical suction line riser (<36kBtu/h unit).

-An oil trap should be installed every 32.8ft(10m) of vertical suction line riser (≥36kBtu/h unit).

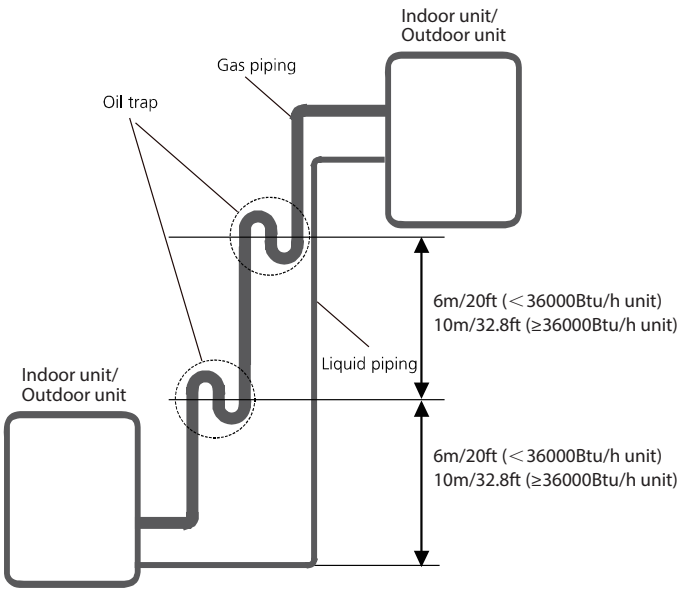

4.2 The procedure of connecting pipes

1.Choose the pipe size according to the specification table.

2.Confirm the cross way of the pipes.

3.Measure the necessary pipe length.

4.Cut the selected pipe with pipe cutter

- Make the section flat and smooth.

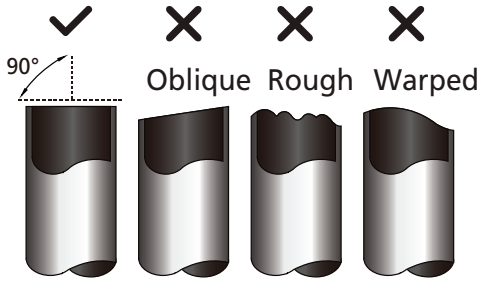

5. Insulate the copper pipe

- Before test operation, the joint parts should not be heat insulated.

6. Flare the pipe

- Insert a flare nut into the pipe before flaring the pipe
- According to the following table to flare the pipe.

Pipe diameter (inch(mm))	Flare dimension A (inch/mm)		Flare shape
	Min	Max	
Ø3/8 (Ø9.52)	0.52/13.2	0.53/13.5	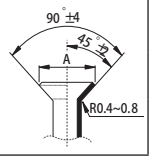
Ø5/8 (Ø15.9)	0.76/19.2	0.78/19.7	
Ø3/4 (Ø19)	0.91/23.2	0.93/23.7	

- After flared the pipe, the opening part must be seal by end cover or adhesive tape to avoid duct or exogenous impurity come into the pipe.

7. Drill holes if the pipes need to pass the wall.

8. According to the field condition to bend the pipes so that it can pass the wall smoothly.

9. Bind and wrap the wire together with the insulated pipe if necessary.

10. Set the wall conduit

11. Set the supporter for the pipe.

12. Locate the pipe and fix it by supporter

- For horizontal refrigerant pipe, the distance between supporters should not be exceed 1m.

- For vertical refrigerant pipe, the distance between supporters should not be exceed 1.5m.

13. Connect the pipe to indoor unit and outdoor unit by using two spanners.

- Be sure to use two spanners and proper torque to fasten the nut, too large torque will damage the bell mouthing, and too small torque may cause leakage. Refer the following table for different pipe connection.

Pipe diameter (inch(mm))	Torque N.m(lb.ft)	Sketch map
Ø3/8 (Ø9.52)	32~39 (23.6~28.8)	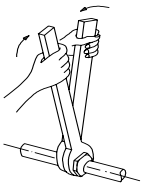
Ø5/8 (Ø15.9)	57~71 (42~52.4)	
Ø3/4 (Ø19)	67~101 (49.4~74.5)	

5. Vacuum Drying and Leakage Checking

5.1 Purpose of vacuum drying

- Eliminating moisture in system to prevent the phenomena of ice-blockage and copper oxidation.

  Ice-blockage shall cause abnormal operation of system, while copper oxide shall damage compressor.
- Eliminating the non-condensable gas (air) in system to prevent the components oxidizing, pressure fluctuation and bad heat exchange during the operation of system.

5.2 Selection of vacuum pump

- The ultimate vacuum degree of vacuum pump shall be -756mmHg or above.
- Precision of vacuum pump shall reach 0.02mmHg or above.

5.3 Operation procedure for vacuum drying

Due to different construction environment, two kinds of vacuum drying ways could be chosen, namely ordinary vacuum drying and special vacuum drying.

5.3.1 Ordinary vacuum drying

1. When conduct first vacuum drying, connect pressure gauge to the infusing mouth of gas pipe and liquid pipe, and keep vacuum pump running for 1hour (vacuum degree of vacuum pump shall be reached -755mmHg).

2. If the vacuum degree of vacuum pump could not reach -755mmHg after 1 hour of drying, it indicates that there is moisture or leakage in pipeline system and need to go on with drying for half an hour.

3. If the vacuum degree of vacuum pump still could not reach -755mmHg after 1.5 hours of drying, check whether there is leakage source.

4 . Leakage test: After the vacuum degree reaches -755mmHg, stop vacuum drying and keep the pressure for 1 hour. If the indicator of vacuum gauge does not go up, it is qualified. If going up, it indicates that there is moisture or leak source.

5.3.2 Special vacuum drying

The special vacuum drying method shall be adopted when:

1. Finding moisture during flushing refrigerant pipe.

2. Conducting construction on rainy day, because rain water might penetrated into pipeline.

3. Construction period is long, and rain water might penetrated into pipeline.

4. Rain water might penetrate into pipeline during construction.

Procedures of special vacuum drying are as follows:

1. Vacuum drying for 1 hour.

2. Vacuum damage, filling nitrogen to reach 0.5Kgf/cm^2 .

Because nitrogen is dry gas, vacuum damage could achieve the effect of vacuum drying, but this method could not achieve drying thoroughly when there is too much moisture. Therefore, special attention shall be drawn to prevent the entering of water and the formation of condensate water.

3. Vacuum drying again for half an hour.

If the pressure reached -755mmHg, start to pressure leakage test. If it cannot reached the value, repeat vacuum damage and vacuum drying again for 1 hour.

4. Leakage test: After the vacuum degree reaches -755mmHg, stop vacuum drying and keep the pressure for 1 hour. If the indicator of vacuum gauge does not go up, it is qualified. If going up, it indicates that there is moisture or leak source.

6. Additional Refrigerant Charge

- After the vacuum drying process is carried out, the additional refrigerant charge process need to be performed.
- The outdoor unit is factory charged with refrigerant. The additional refrigerant charge volume is decided by the diameter and length of the liquid pipe between indoor and outdoor unit. Refer the following formula to calculate the charge volume.

	Diameter of liquid pipe (inch(mm))	Formula
R454B	Ø1/4 (Ø6.35)	V=0.32(30)oz/ft(g/m)×(L-standard pipe length)
	Ø3/8 (Ø9.52)	V=0.7(65)oz/ft(g/m)×(L-standard pipe length)

V: Additional refrigerant charge volume.

L : The length of the liquid pipe.

Note:

- Refrigerant may only be charged after performed the vacuum drying process.
- Always use gloves and glasses to protect your hands and eyes during the charge work.
- Use electronic scale or fluid infusion apparatus to weight refrigerant to be recharged. Be sure to avoid extra refrigerant charged, it may cause liquid hammer of the compressor or protections.
- Use supplementing flexible pipe to connect refrigerant cylinder, pressure gauge and outdoor unit. And The refrigerant should be charged in liquid state. Before recharging, The air in the flexible pipe and manifold gauge should be exhausted.
- After finished refrigerant recharge process, check whether there is refrigerant leakage at the connection joint part.(Using gas leakage detector or soap water to detect).

7 . Engineering of Insulation

7.1 Insulation of refrigerant pipe

1. Operational procedure of refrigerant pipe insulation

Cut the suitable pipe → insulation (except joint section) → flare the pipe → piping layout and connection→ vacuum drying → insulate the joint parts

2. Purpose of refrigerant pipe insulation

- During operation, temperature of gas pipe and liquid pipe shall be over-heating or over-cooling extremely. Therefore, it is necessary to carry out insulation; otherwise it shall debase the performance of unit and burn compressor.
- Gas pipe temperature is very low during cooling. If insulation is not enough, it shall form dew and cause leakage.
- Temperature of gas pipe is very high (generally 50-100℃) during heating. Insulation work must be carried out to prevent hurt by carelessness touching.

3. Insulation material selection for refrigerant pipe

- The burning performance should over 120℃
- According to the local law to choose insulation materials
- The thickness of insulation layer shall be above 10mm.If in hot or wet environment place, the layer of insulation should be thicker accordingly.

4. Installation highlights of insulation construction

- Gas pipe and liquid pipe shall be insulated separately, if the gas pipe and liquid pipe were insulated together; it will decrease the performance of air conditioner.

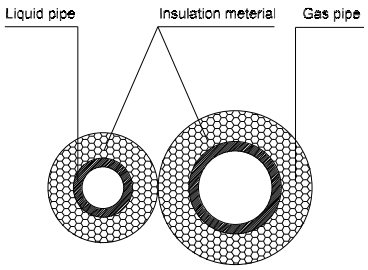

- The insulation material at the joint pipe shall be 5~10cm longer than the gap of the insulation material.
- The insulation material at the joint pipe shall be inserted into the gap of the insulation material.
- The insulation material at the joint pipe shall be banded to the gap pipe and liquid pipe tightly.
- The linking part should be use glue to paste together
- Be sure not bind the insulation material over-tight, it may extrude out the air in the material to cause bad insulation and cause easy aging of the material.

8. Engineering of Electrical Wring

1. Highlights of electrical wiring installation

- All wiring must comply with local and national electrical codes, regulations and must be installed by a licensed electrician.
- All electrical connections must be made according to the Electrical Connection Diagramlocated on the panels of the indoor and outdoor units.
- If there is a serious safety issue with the power supply, stop work immediately. Explain your reasoning to the client, and refuse to install the unit until the safety issue is properly resolved.
- Power voltage should be within 90-110% of rated voltage. Insufcient power supply can cause malfunction, electrical shock, or fire.
- Installation of an external surge suppressor at the outdoor disconnect is recommended.
- If connecting power to fixed wiring, a switch or circult breaker that disconnects all poles and has a contact separation of at least 1/8in (3mm) must be incorporated in the fixed wiring. The qualified technician must use an approved circuit breaker or switch.
- Only connect the unit to an individual branch circuit. Do not connect another appliance to that outlet.
- Make sure to properly ground the air conditioner.
- Every wire must be firmly connected. Loose wiring can cause the terminal to overheat, resulting in product malfunction and possible fire.
- Do not let wires touch or rest against refrigerant tubing, the compressor, or any moving parts within the unit.
- If the unit has an auxiliary electric heater, it must be installed at least 40in (1 m)away from any combustible materials.
- To avoid getting an electric shock, never touch the electrical components soon after the power supply has been turned off. After turning of the power, always wait 10 minutes or more before you touch the electrical components.
- Make sure that you do not cross your electrical wiring with your signal wiring.
- This may cause distortion, interference or possibly damage to circuit boards.
- No other equipment should be connected to the same power circuit.
- Connect the outdoor wires before connecting the indoor wires.

Table: Minimum Cross-Sectional Area able of Power and Signal Cables

Rated Current of Appliance (A)	AWG
≤ 6	18
6 - 10	16
10 - 16	14
16 - 25	12
25 - 32	10

2. Outdoor Unit Wiring

WARNING:

Before performing any electrical or wiring work, turn off the main power to the system.

1. Prepare the cable for connection

a. You must first choose the right cable size.

Choose the cable type according to the local electrical codes and regulations.

b. The size of the power supply cable, signal cable, fuse, and switch needed is determined by the Minimum Circuit Ampacity of the unit. The Minimum Circuit Ampacity is indicated on the nameplate located on the side panel of the unit. Refer to this nameplate to choose the right cable, fuse,or switch.

c. Using wire strippers, strip the rubber jacketfrom both ends of the signal cable to reveal approximately 5.9in (150mm) of wire.

d.Strip the insulation from the ends.

e. Using a wire crimper, crimp u-lugs on the ends.

NOTE: When connecting the wires, strictly follow the wiring diagram found inside the electrical box cover.

2. Remove the 2 screws fixed the front right panel, then take it down to perform wire connection. (for double fan outdoor units)

Unscrew the big handle and remove it.(for single fan outdoor units)

3.Connect the u-lugs to the terminals Match the wire colors/labels with the labels on the terminal block. Firmly screw the u-lug of each wire to its corresponding terminal.

4.Clamp down the cable with the cable clamp.

5.Insulate unused wires with electrical tape.

Keep them away from any electrical or metal parts.

6.Reinstall the cover of the electric control box.

9. Test Operation

1. The test operation must be carried out after the entire installation has been completed.

2. Please confirm the following points before the test operation.

- The indoor unit and outdoor unit are installed properly.
- Piping and wiring are properly connected.
- Ensure that there are no obstacles near the inlet and outlet of the unit that might cause poor performance or product malfunction.
- The refrigeration system does not leak.
- The drainage system is unimpeded and draining to a safe location.
- The heating insulation is properly installed.
- The grounding wires are properly connected
- The length of the piping and the added refrigerant stow capacity have been recorded.
- Power voltage is the correct voltage for the air conditioner.

CAUTION: Failure to perform the test run may result in unit damage, property damage or personal injury.

3. Test Run Instructions

1. Open both the liquid and gas stop valves.

2. Turn on the main power switch and allow the unit to warm up.

3. Set the air conditioner to COOL mode, and check the following points.

Indoor unit

- Double check to see if the room temperature is being registered correctly.
- Ensure the manual buttons on the indoor unit works properly.
- Check to see that the drainage system is unimpeded and draining smoothly.
- Ensure there is no vibration or abnormal noise during operation.

Outdoor unit

- Check to see if the refrigeration system is leaking.
- Make sure there is no vibration or abnormal noise during operation.
- Ensure the wind, noise, and water generated by the unit do not disturb your neighbors or pose a safety hazard.

4. Drainage Test

a. Ensure the drainpipe flows smoothly. New buildings should perform this test before finishing the ceiling.

b. Turn on the main power switch and run the air conditioner in COOL mode.

c. Check to see that the water is discharged. It may take up to one minute before the unit begins to drain depending on the drainpipe.

d. Make sure that there are no leaks in any of the piping.

e. Stop the air conditioner. Turn off the main power switch and reinstall the test cover.

Basic Functions

Contents

1. Basic Functions 2

1.1 Abbreviation 2

1.2 Fan Mode 2

1.3 Cooling Mode 2

1.4 Heating Mode(Heat Pump Units) 2

1. Basic Functions

1.1 Abbreviation

Unit element abbreviations

Abbreviation	Element
T1	Indoor room temperature
T2	Coil temperature of evaporator
T3	Coil temperature of condenser
T4	Outdoor ambient temperature
TP	Compressor discharge temperature
Tsc	Adjusted setting temperature
TCDE1	Exit defrost temperature1
TCDE2	Exit defrost temperature2 (maintain for a period of time)
TIMING_ DEFROST_TIME_ ADD	Enter defrost time
EE_TIME_ DEFROST7_ STRONG	Enter enhanced defrost time
TCDE1_ADD_ STRONG	Exit enhanced defrost temperature1
TCDE2_ADD_ STRONG	Exit enhanced defrost temperature2 (maintain for a period of time)

In this manual, such as TCDE1, TCDE2, TIMING_DEFROST_ TIME_ADD...etc., they are well-setting parameter of EEPROM.

1.2 Fan Mode

When fan mode is activated:

- The outdoor fan and compressor are stopped.

1.3 Cooling Mode

1.3.1 Compressor Control

1) Reach the configured temperature:

- If the following conditions are satisfied, the compressor ceases operation.
  - Calculated frequency(fb) is less than 0Hz.
  - Reach temperature stop protective time is more than 10 minutes.
  - Indoor room temperature(T1) is lower than or equal to (Tsc-0.5°C/1°F)

2) If one of the following conditions is satisfied, not judge protective time.

  - Compressor running frequency is more than test frequency.
  - When compressor running frequency is equal to test frequency, outdoor ambient temperature(T4) is more than 15°C/59 °F or outdoor ambient sensor(T4) fault.
  - Change setting temperature.
  - Turning on/off turbo or sleep function
  - Various frequency limit shutdown occurs.

1.3.2 Outdoor Fan Control

- The outdoor unit will be run at different fan speed according to outdoor ambient temperature(T4) and compressor frequency.
- For different outdoor units, the fan speeds are different.

1.3.3 Condenser Temperature Protection

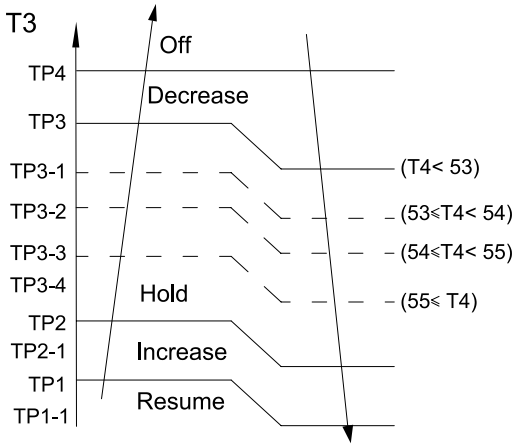

When the condenser temperature exceeds a configured value, the compressor ceases operation.

1.4 Heating Mode(Heat Pump Units)

1.4.1 Compressor Control

1) Reach the configured temperature

- If the following conditions are satisfied, the compressor ceases operation.
  - Calculated frequency(fb) is less than 0Hz.
  - Reach temperature stop protective time is more than 10 minutes.
  - T1 is higher than or equal to Tsc+ 0.5°C/1°F.
- If one of the following conditions is satisfied, not judge protective time.
  - Compressor running frequency is more than test frequency.
  - Compressor running frequency is equal to test frequency, outdoor ambient temperature(T4) is more than 15°C(59 °F) or Outdoor ambient sensor(T4) fault.
  - Change setting temperature.

- Turning on/off turbo or sleep function

2) When the current is higher than the predefined safe value, surge protection is activated, causing the compressor to cease operations.

1.4.2 Outdoor Fan Control:

- The outdoor unit will be run at different fan speed according to outdoor ambient temperature(T4) and compressor frequency.
- For different outdoor units, the fan speeds are different.

1.4.3 Defrosting mode

- The unit enters defrosting mode according to the temperature value of condenser temperature(T3) and outdoor ambient temperature(T4) as well as the compressor running time.
- In defrosting mode, the compressor continues to run, the indoor and outdoor motor will cease operation, the defrost light of the indoor unit will turn on, and the "dF" symbol is displayed.
- If any one of the following conditions is satisfied, defrosting ends and the machine switches to normal heating mode:
  - Condenser temperature(T3) rises above TCDE1.
  - Condenser temperature(T3) maintained above TCDE2 for 80 seconds.
  - Unit runs for 15 minutes consecutively in defrosting mode.
- If Outdoor ambient temperature(T4) is lower than or equal to -22°C/-8 °F and compressor running time is more than TIMING_DEFROST_TIME, if any one of the following conditions is satisfied, defrosting ends and the machine switches to normal heating mode:
  - Unit runs for 10 minutes consecutively in defrosting mode.
  - Condenser temperature(T3) rises above 10°C/50°F.
- If any one of the following conditions is satisfied, the unit enters defrosting mode
  - If condenser temperature(T3) or outdoor ambient temperature(T4) is lower than -3°C/-27°F for 30 seconds,Ts-T1 is lower than 5°C/9°F and compressor running time is more than EE_TIME_DEFROST7_ADD.
  - If condenser temperature(T3) or outdoor ambient temperature(T4) is lower than -3°C/-27°F for 30 seconds and compressor running time is more than EE_TIME_DEFROST7_ADD+30 minutes.
- If any one of the following conditions is satisfied, defrosting ends and the machine switches to normal heating mode:
  - Condenser temperature(T3) rises above TCDE1+4°C/7°F.
  - Condenser temperature(T3) maintained above TCDE2+4°C/7°F for 80 seconds.
  - Unit runs for 15 minutes consecutively in defrosting mode.

Enhanced defrosting parameter selection entrance:

1. 24V ODU: Determined by the SW1-4 DIP on the 24V transfer board, the DIP code selection OFF uses the default defrosting parameter, and the DIP code selects ON to adjust the following defrosting parameter values.
2. AHU: Enter the engineering mode, select the 27th channel, and set the enhanced defrost.

Once you choose enhanced defrosting:

Defrost exit temperature 1: Replace TCDE1 with TCDE1_ADD_STRONG

Defrost exit temperature 2: Replace TCDE2 with TCDE2_ADD_STRONG

Defrosting enter condition 7: Compressor Cumulative Running Time: Replace EE_TIME_DEFROST7_ADD with EE_TIME_DEFROST7_STRONG.

Troubleshooting

Contents

1. Safety Caution 3

2. General Troubleshooting 4

2.1 Error Display(For models with auxiliary boards) 4

3. Outdoor Unit Point Check Function 6

4. Quick Maintenance by Error Code 8

5. Troubleshooting by Error Code 10

5.1 EC51 (ODU EEPROM parameter error diagnosis and solution) 10

5.2 EL01(IDU & ODU communication error diagnosis and solution) 11

5.3 EC07 (ODU fan speed out of control) Diagnosis and Solution 12

5.4 EC52/EC53/EC54/EC57 (Open circuit or short circuit of temperature sensor diagnosis and solution) 14

5.5 PC08(Current overload protection)/PC42(Compressor start failure of outdoor unit)/ PC44(ODU zero speed protection) /PC46(Compressor speed has been out of control)/ PC49(Compressor overcurrent failure) 15

5.6 PC00(IPM malfunction diagnosis and solution) 17

5.7 PC10(ODU low AC voltage protection)/PC11(ODU main control board DC bus high voltage protection)/PC12(ODU main control board DC bus low voltage protection /341 MCE error) Diagnosis and Solution 19

5.8 PC40(Communication error between ODU main chip and compressor driven chip diagnosis and solution) 21

5.9 PC0F(PFC module protection diagnosis and solution) 22

5.10 PC06(Discharge temperature protection of compressor diagnosis and solution) 23

5.11 PC0A(High temperature protection of condenser diagnosis and solution) 24

Troubleshooting

Contents

5.12 PC02/LC06 (Compressor top(or IPM) temp. protection/Refrigerant sensor error diagnosis and solution) 25

5.13 PC30 (System high pressure protection diagnosis and solution) 27

5.14 PC31 (System low pressure protection diagnosis and solution) 29

5.15 PC43 (ODU compressor lack phase protection diagnosis and solution)..... 31

5.16 PC45 (ODU IR chip drive failure diagnosis and solution)..... 32

5.17 PC41(Outdoor compressor current sampling circuit failure diagnosis and solution) 32

5.18 EC55(ODU IPM module temperature sensor malfunction diagnosis and solution) 33

5.19 PH90(High temperature protection of evaporator diagnosis and solution)..... 34

5.20 PH91(Low temperature protection of evaporator diagnosis and solution) 35

5.21 EC5C(High pressure sensor is in open circuit or has short circuited) diagnosis and solution 35

5.22 EL16(Communication malfunction between adapter board and outdoor main board diagnosis and solution)..... 36

6. Check Procedures

1. Safety Caution

WARNING

Be sure to turn off all power supplies or disconnect all wires to avoid electric shock.
While checking indoor/outdoor PCB, please equip oneself with antistatic gloves or wrist strap to avoid damage to the board.

WARNING

Electricity remains in capacitors even when the power supply is off.
Ensure the capacitors are fully discharged before troubleshooting.

NOTE: If using the inverter test tool maintenance, remove the big handle and connect the inverter test tool to TESTPORT(CN7).

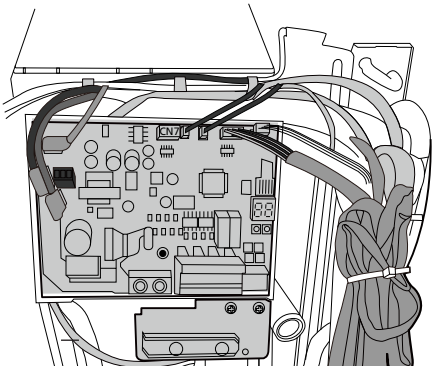

Note: This picture is for reference only. Actual appearance may vary.

2. General Troubleshooting

2.1 Error Display(For models with auxiliary boards)

Display	Malfunction or Protection	Solution
dF	Defrosting	Normal Display, not error code
FC	Forced cooling	
EC07	ODU fan speed out of control	TS12
EC51	ODU EEPROM parameter error	TS10
EC52	ODU coil temp. sensor(T3) error	TS14
EC53	ODU ambient temp. sensor(T4) error	TS14
EC54	COMP. discharge temp. sensor(TP) error	TS14
EC55	ODU IPM module temperature sensor malfunction	TS33
EC57	Refrigerant temperature sensor error	TS14
EC5C	Pressure sensor failure	TS35
EL01	IDU & ODU communication error	TS11
EL16	Communication malfunction between adapter board and ODU main board	TS36
PC00	IPM module protection	TS17
PC02	Compressor top(or IPM) temp. protection/ Refrigerant sensor error	TS25
PC06	Discharge temperature protection of compressor	TS23
PC08	Outdoor overcurrent protection	TS15
PC0A	High temperature protection of condenser	TS24
PC0F	PFC module protection	TS22
PC10	ODU low AC voltage protection	TS19
PC11	ODU main control board DC bus high voltage protection	TS19
PC12	ODU main control board DC bus low voltage protection /341 MCE error	TS19
PC30	System high pressure protection	TS27
PC31	System low pressure protection	TS29
PC40	Communication error between ODU main chip and compressor driven chip	TS21
PC41	Compressor current sampling failure	TS32
PC42	Compressor start failure of outdoor unit	TS15
PC43	ODU compressor lack phase protection	TS31

PC44	ODU zero speed protection	TS15
PC45	ODU IR chip drive failure	TS32
PC46	Compressor speed has been out of control	TS15
PC49	Compressor overcurrent failure	TS15
LC06	High temperature protection of Inverter module (IPM)	TS26
PH90	High temperature protection of evaporator	TS34
PH91	Low temperature protection of evaporator	TS35

3. Outdoor Unit Point Check Function

- A check switch is included on the adapter board.
- Push SW4 to check the unit's status while running. The digital display shows the following codes each time the SW4 is pushed.

Number of Presses	Display	Remark
00	Normal display	Displays running frequency, running state, or malfunction code Defrosting mode: "dF" or alternative displays between running frequency and "dF" (ach appears for 0.5s.) Forced cooling mode: the LED displays "FC" or alternative displays between running frequency and "FC" (each appears for 0.5s).
01	Indoor unit capacity demand code	Actual data*HP*10 If capacity demand code is higher than 99, light the decimal point of the high digit tube. (For example, the digital display tube show "5.0",so 5.0 multipled by 10 to become 50, then added to 100 to become 150, so actual capacity demand=150/10=15. the digital display tube show "60",so actual capacity demand=60/10=6.0) GA algorithm models display "--"
02	The frequency after the capacity requirement adapter	If the value is higher than 99, light the decimal point of the high digit tube.
03	Room temperature (T1)	If the temp. is lower than 0°C, the digital display tube will show "0". If the temp. is higher than 70°C, the digital display tube will show "70".
04	Indoor unit evaporator temperature (T2)	If the temp. is lower than -9°C, the digital display tube will show "-9".If the temp. is higher than 70°C, the digital display tube will show "70". If the indoor unit is not connected, the digital display tube will show: "--"
05	Condenser pipe temp.(T3)	
06	Outdoor ambient temp.(T4)	
07	Compressor discharge temp. (TP)	The display value is between 0~199°C. If the temp. is lower than 0°C, the digital display tube will show "0".If the temp. is higher than 99°C,light the decimal point of the high digit tube. (For example, the digital display tube show "0.5",so 0.5 multipled by 10 to become 5, then added to 100 to become 105°C.)
08	AD value of current	The display value is a hex number. For example, the digital display tube shows "Cd", so $C*16^1+d*16^0=12*16+13=205$, it means AD value is 205.
09	AD value of voltage	
10	Indoor unit running mode code	Standby:0,Cooling:1, Heating:2, Fan only 3, Drying:4, Forced cooling:6, Defrost:7; ECO:9; Forced defrosting:A; Self clean:B
11	Outdoor unit running mode code	
12	EXV open angle	Actual data/4. If the value is higher than 99, light the decimal point of the high digit tube. For example, the digital display tube show "2.0",so 2.0 multipled by 10 to become 20, then added to 100 to become 120,it means the EXV open angle is 120×4=480p.)

<table>
<tr><td rowspan="8">13</td><td rowspan="8">Frequency limit symbol</td><td>Bit7</td><td>Frequency limit caused by IGBT radiator</td><td rowspan="8">The display value is a hex number. For example, the digital display show 2A, the corresponding binary is 101010, so Bit5=1, Bit3=1, and Bit1=1.

This means that a frequency limit may be caused by T3 or the current.</td></tr>
<tr><td>Bit6</td><td>Reserved</td></tr>
<tr><td>Bit5</td><td>Reserved</td></tr>
<tr><td>Bit4</td><td>Frequency limit caused by low temperature of T2.(LH00)</td></tr>
<tr><td>Bit3</td><td>Frequency limit caused by T3.(LC01)</td></tr>
<tr><td>Bit2</td><td>Frequency limit caused by TP.(LC02)</td></tr>
<tr><td>Bit1</td><td>Frequency limit caused by current(LC03)</td></tr>
<tr><td>Bit0</td><td>Frequency limit caused by voltage (LC05)</td></tr>
<tr><td>14</td><td>Outdoor unit fan speed</td><td colspan="3">If it is higher than 99, light the decimal point of the high digit tube. (For example, the digital display tube show “2.0”, so 2.0 multipled by 10 to become 20, then added to 100 to become 120. This value is multiplied by 8, and it is the current fan speed: 120*8=960</td></tr>
<tr><td>15</td><td>The average value of the temperature values detected by the high and low pressure sensors in the last 10 seconds of the compressor frequency calculation period</td><td colspan="3" rowspan="2">The displayed value is the actual value plus 60 (that is, when the displayed value is 10, the actual value is -50). When the displayed value is higher than 99, light the decimal point of the high digit tube. (if it displays 2.0, so 2.0 multipled by 10 to become 20, then added to 100 to become 120, the actual value is 60)

When there is no pressure sensor, it is displayed as --</td></tr>
<tr><td>16</td><td>The temperature value detected by the high and low pressure sensor</td></tr>
<tr><td>17</td><td>AD value detected by the high and low pressure sensor</td><td colspan="3">The display value is a hex number.

For example, the digital display tube shows “Cd”, so $C*16^1+d*16^0=12*16+13=205$, it means AD value is 205.When there is no pressure sensor, it is displayed as --</td></tr>
<tr><td>18</td><td>The currently running communication protocol version</td><td colspan="3">00-99</td></tr>
</table>

4. Quick Maintenance by Error Code

If you do not have the time to test which specific parts are faulty, you can directly change the required parts according the error code. You can find the parts to replace by error code in the following table.

Part requiring replacement	Error Code							
	EL01	EC51	EC52	EC53	EC54	EC55	EC5C	EC57
Indoor PCB	✓	x	x	x	x	x	x	x
Outdoor PCB	✓	✓	✓	✓	✓	✓	✓	✓
ODU coil temp. sensor	x	x	✓	x	x	x	x	x
ODU ambient temp. sensor	x	x	x	✓	x	x	x	x
COMP. discharge temp. sensor	x	x	x	x	✓	x	x	x
IPM module temperature sensor	x	x	x	x	x	✓	x	x
Pressure sensor	x	x	x	x	x	x	✓	x
Refrigerant temperature sensor	x	x	x	x	x	x	x	✓
Condenser temperature sensor	x	x	x	x	x	x	x	x
Reactor	✓	x	x	x	x	x	x	x
IPM module board	✓	x	x	x	x	x	x	x

Part requiring replacement	Error Code								
	EC07	PC00	PC10/PC11/ PC12	PC02	PC08 /PC42 /PC44/ PC46/ PC48	PC0F	PC41	PH90	PH91
Outdoor PCB	✓	✓	✓	✓	✓	✓	✓	x	x
Outdoor fan motor	✓	✓	x	x	✓	x	x	x	x
Reactor or inductance	x	✓	✓	x	✓	✓	x	x	x
Compressor	x	✓	x	x	x	x	x	x	x
IPM module board	x	✓	✓	x	✓	x	x	x	x
Bridge rectifier	x	✓	✓	x	✓	x	x	x	x
Evaporator coil temperature sensor	x	x	x	x	x	x	x	✓	✓
PFC module	x	x	x	x	x	✓	x	x	x
Additional refrigerant	x	x	x	x	x	x	x	x	x
Over load protector	x	x	x	✓	x	x	x	x	x
ODU ambient temp. sensor	x	x	x	x	x	x	x	x	x
Refrigerant temperature sensor	x	x	x	x	x	x	x	x	x
Indoor fan	x	x	x	x	x	x	x	✓	x
Indoor PCB	x	x	x	x	x	x	x	✓	✓

Part requiring replacement	Error Code							
	PC40	PC43	PC45	PC06	PC08	PC30	PC31	EU16
Outdoor PCB	✓	✓	x	✓	✓	✓	✓	✓
Outdoor fan motor	x	x	x	x	✓	✓	✓	x
ODU coil temp. sensor	x	x	x	x	✓	x	x	x
COMP. discharge temp. sensor	x	x	x	✓	x	x	x	x
Compressor	x	✓	x	x	x	x	x	x
IPM module board	x	x	✓	x	x	x	x	x
Additional refrigerant	x	x	x	✓	✓	x	✓	x
Electric control box	✓	x	x	x	x	x	x	x
High pressure switch	x	x	x	x	x	✓	x	x
Low pressure switch	x	x	x	x	x	x	✓	x
Adapter board	x	x	x	x	x	x	x	✓

5. Troubleshooting by Error Code

5.1 EC51 (ODU EEPROM parameter error diagnosis and solution)

Description: Indoor or outdoor PCB main chip does not receive feedback from EEPROM chip.

Recommended parts to prepare:

- Indoor PCB
- Outdoor PCB

Troubleshooting and repair:

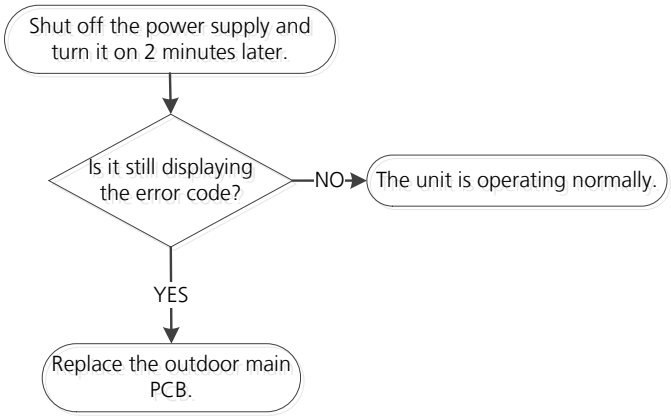

Remarks:
EEPROM: A read-only memory whose contents can be erased and reprogrammed using a pulsed voltage.

The location of the EEPROM chip on the outdoor PCB is shown in the following image:

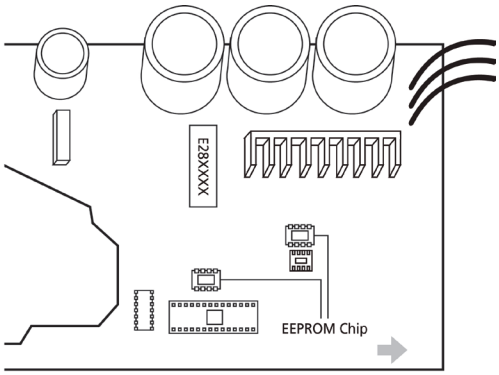

This pictures are only for reference, actual appearance may vary.

5.2 EL01(IDU & ODU communication error diagnosis and solution)

Recommended parts to prepare:

- Signal wires
- Magnet ring
- Indoor PCB
- Outdoor PCB

Troubleshooting and repair:

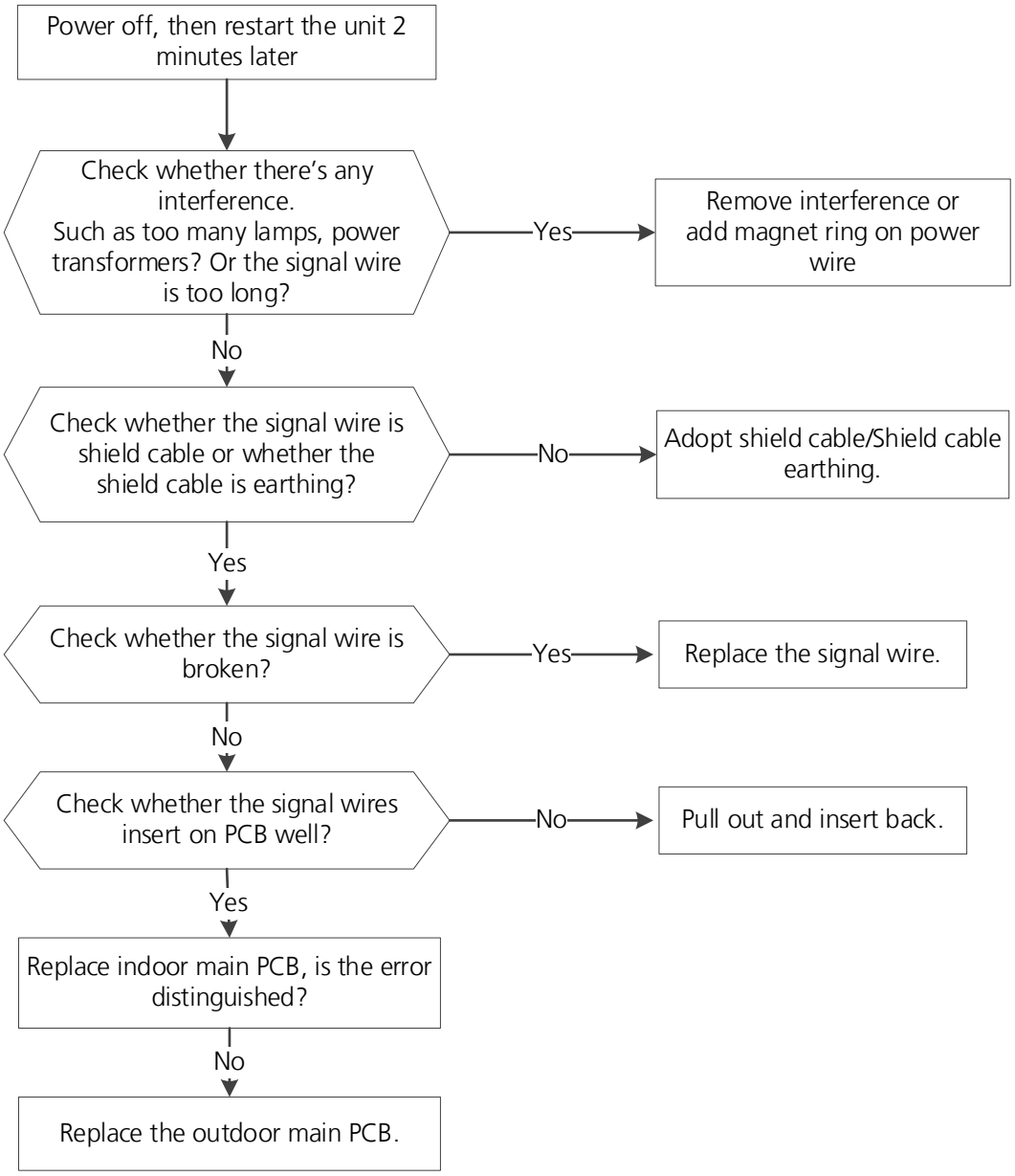

5.3 EC07 (ODU fan speed out of control) Diagnosis and Solution

Description: When indoor / outdoor fan speed keeps too low or too high for a certain time, the LED displays the failure code and the AC turns off.

Recommended parts to prepare:

- Connection wires
- Fan assembly
- Fan motor
- PCB

Troubleshooting and repair:

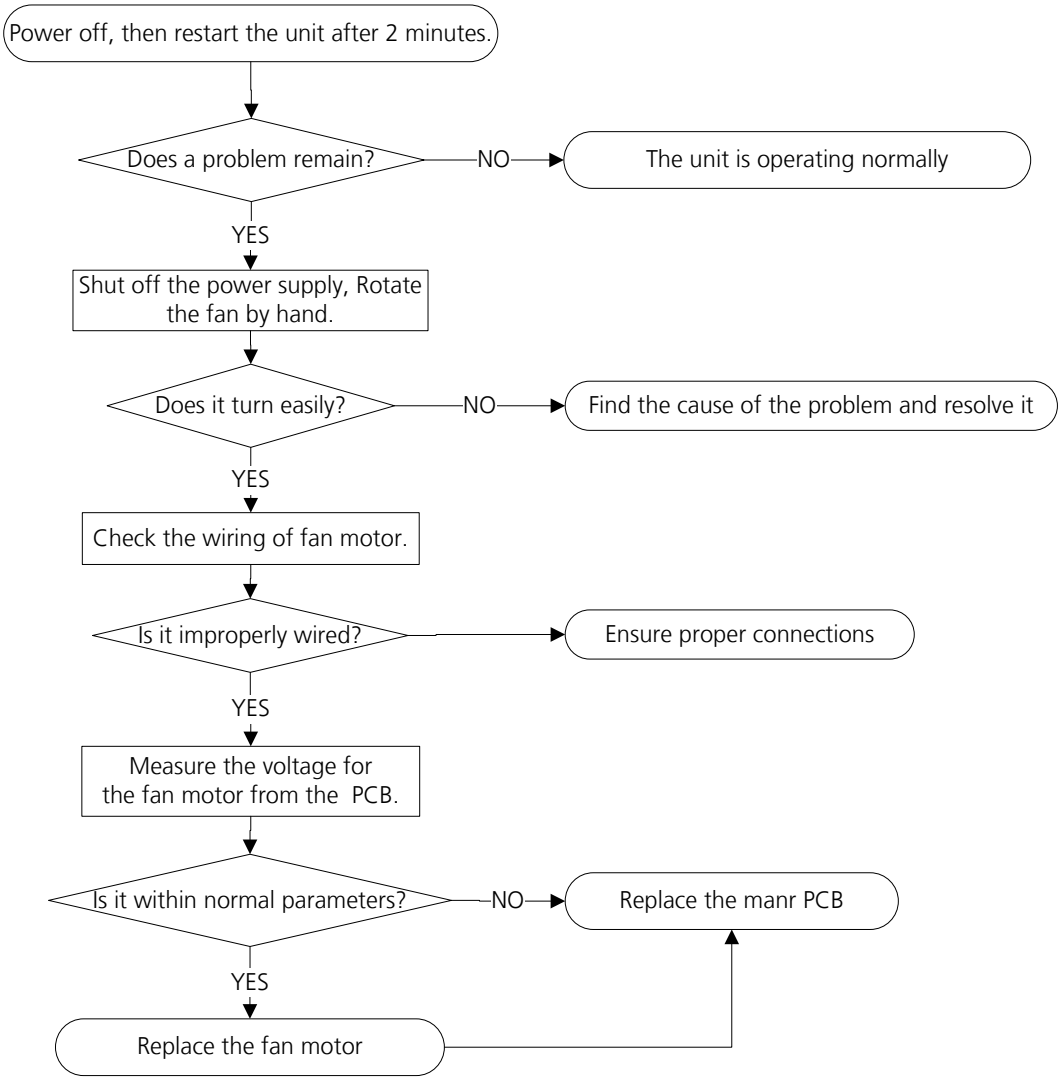

Index:

1. Outdoor DC Fan Motor(control chip is in fan motor)

Power on and when the unit is in standby, measure the voltage of pin1-pin3, pin4-pin3 in fan motor connector. If the value of the voltage is not in the range showing in below table, the PCB must has problems and need to be replaced.

- DC motor voltage input and output (voltage: 220-240V~):

No.	Color	Signal	Voltage
1	Red	Vs/Vm	192V~380V
2	---	---	---
3	Black	GND	0V
4	White	Vcc	13.5-16.5V
5	Yellow	Vsp	0~6.5V
6	Blue	FG	13.5-16.5V

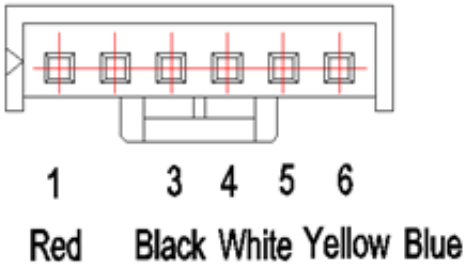

2. Outdoor DC Fan Motor (control chip is in outdoor PCB)

Release the UVW connector. Measure the resistance of U-V, U-W, V-W. If the resistance is not equal to each other, the fan motor must has problems and need to be replaced. otherwise the PCB must has problems and need to be replaced.

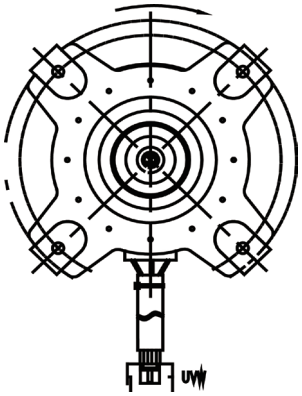

5.4 EC52/EC53/EC54/EC57 (Open circuit or short circuit of temperature sensor diagnosis and solution)

Description: If the sampling voltage is lower than 0.06V or higher than 4.94V, the LED displays the failure code.

Recommended parts to prepare:

- Connection wires
- Sensors
- Outdoor PCB

Troubleshooting and repair:

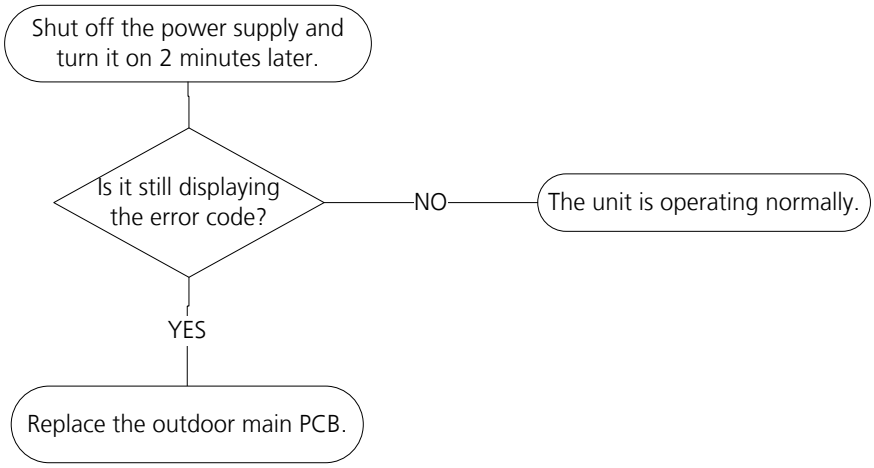

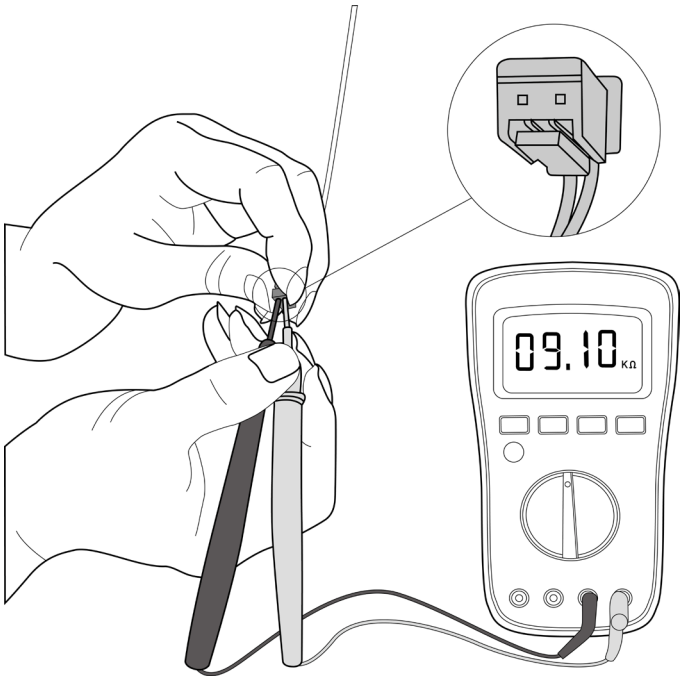

This picture and the value are only for reference, actual appearance and value may vary.

5.5 PC08(Current overload protection)/PC42(Compressor start failure of outdoor unit)/ PC44(ODU zero speed protection) /PC46(Compressor speed has been out of control)/ PC49(Compressor overcurrent failure)

Description: An abnormal current rise is detected by checking the specified current detection circuit.

Recommended parts to prepare:

- Outdoor PCB
- Connection wires
- Bridge rectifier
- PFC circuit or reactor
- Refrigeration piping system
- Pressure switch
- Outdoor fan
- IPM module board

Troubleshooting and repair:

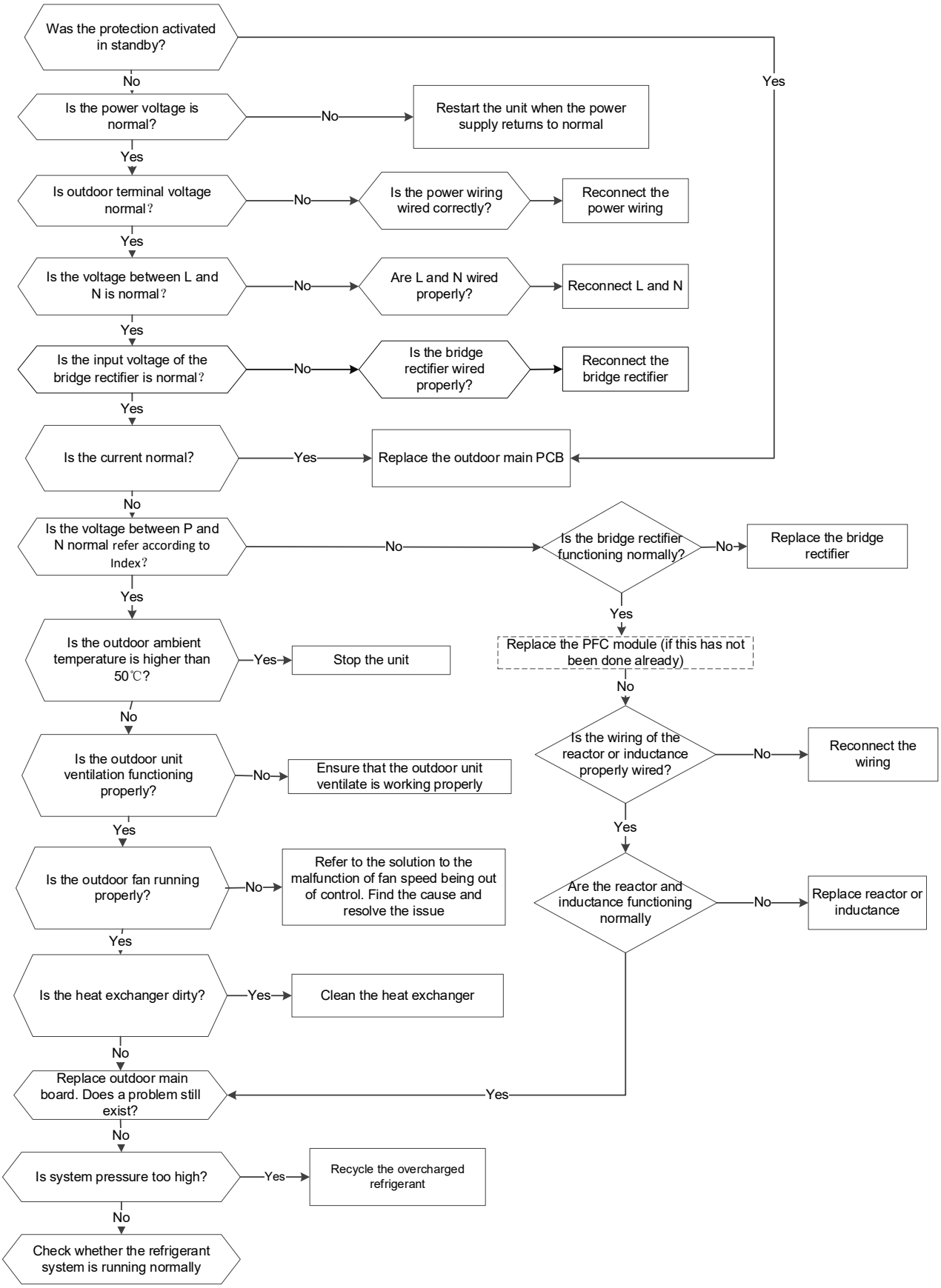
Was the protection activated in standby?
Yes
No
Is the power voltage is normal?
No
Restart the unit when the power supply returns to normal
Yes
Is outdoor terminal voltage normal?
No
Is the power wiring wired correctly?
Reconnect the power wiring
Yes
Is the voltage between L and N is normal?
No
Are L and N wired properly?
Reconnect L and N
Yes
Is the input voltage of the bridge rectifier is normal?
No
Is the bridge rectifier wired properly?
Reconnect the bridge rectifier
Yes
Is the current normal?
Yes
Replace the outdoor main PCB
No
Is the voltage between P and N normal refer according to Index?
No
Is the bridge rectifier functioning normally?
No
Replace the bridge rectifier
Yes
Replace the PFC module (if this has not been done already)
No
Is the wiring of the reactor or inductance properly wired?
No
Reconnect the wiring
Yes
Are the reactor and inductance functioning normally
No
Replace reactor or inductance
Yes
Is the outdoor ambient temperature is higher than 50℃?
Yes
Stop the unit
No
Is the outdoor unit ventilation functioning properly?
No
Ensure that the outdoor unit ventilate is working properly
Yes
Is the outdoor fan running properly?
No
Refer to the solution to the malfunction of fan speed being out of control. Find the cause and resolve the issue
Yes
Is the heat exchanger dirty?
Yes
Clean the heat exchanger
No
Replace outdoor main board. Does a problem still exist?
Yes
No
Is system pressure too high?
Yes
Recycle the overcharged refrigerant
No
Check whether the refrigerant system is running normally

5.6 PC00(IPM malfunction diagnosis and solution)

Description: When the voltage signal the IPM sends to the compressor drive chip is abnormal, the LED displays the failure code and the AC turns off.

Recommended parts to prepare:

- Connection wires
- IPM module board
- Outdoor fan assembly
- Compressor
- Outdoor PCB
- Reactor or inductance
- Bridge rectifier

Troubleshooting and repair:

At first test the resistance between every two ports of U, V, W of IPM and P, N. If any result of them is 0 or close to 0, the IPM is defective. Otherwise, please follow the procedure below:

Is the power voltage normal?
No
Restart the unit when the power supply returns to normal
Yes
Is the outdoor terminal voltage normal?
No
Are the power wires connected properly?
Reconnect the power wires
Yes
Is the voltage between L and N normal?
No
Are L and N wired correctly?
Reconnect L and N
Yes
Is the input voltage of bridge rectifier normal?
No
Is the bridge rectifier properly wired?
Reconnect the bridge rectifier
Yes
Is the voltage between P and N properly wired according to Appendix 3?
No
Is the bridge rectifier operating normally?
No
Replace the bridge rectifier
Yes
Replace the PFC module(If This has not been done already)
No
Are the reactor or Inductance wired properly?
No
Reconnect the wiring
Yes
Are the reactor or inductance normal?
No
Replace reactor or inductance
Yes
Is the connecting wire between the main board and the IPM board connected tightly?
No
Reconnect the main board and IPM board
Yes
Is the connecting wire of the compressor is connected correctly or tightly
No
Reconnect he connecting wire of the compressor
Yes
Is the outdoor unit ventilation in working order?
No
Make sure that the outdoor unit is ventilating properly
Yes
Is the outdoor fan running properly?
No
Refer to the solution for themalfunction of the fan speed being out of control . Find the cause and resolve the problem
Yes
Replace IPM Board. Is the problem resolved?
Yes
No
Replace the outdoor main PCB. Is the problem resolved?
No
Is the compress is running normally?
No
Replace the compressor
Yes
Check whether the refrigerant system is in working order

5.7 PC10(ODU low AC voltage protection)/PC11(ODU main control board DC bus high voltage protection)/PC12(ODU main control board DC bus low voltage protection /341 MCE error) Diagnosis and Solution

Description: Abnormal increases or decreases in voltage are detected by checking the specified voltage detection circuit.

Recommended parts to prepare:

- Power supply wires
- IPM module board
- Outdoor PCB
- Bridge rectifier
- PFC circuit or reactor

Troubleshooting and repair:

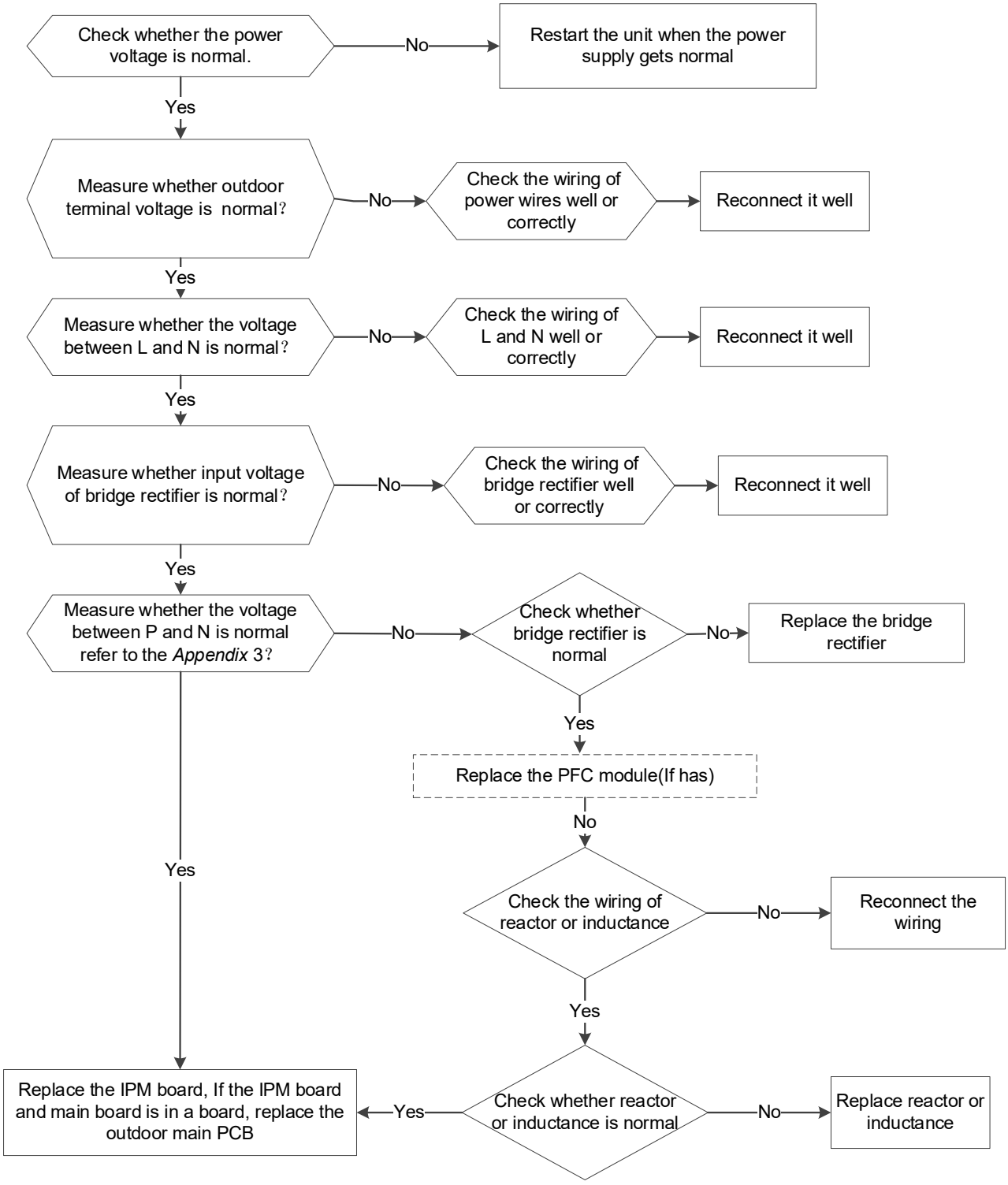
Check whether the power voltage is normal.
No
Restart the unit when the power supply gets normal
Yes
Measure whether outdoor terminal voltage is normal?
No
Check the wiring of power wires well or correctly
Reconnect it well
Yes
Measure whether the voltage between L and N is normal?
No
Check the wiring of L and N well or correctly
Reconnect it well
Yes
Measure whether input voltage of bridge rectifier is normal?
No
Check the wiring of bridge rectifier well or correctly
Reconnect it well
Yes
Measure whether the voltage between P and N is normal refer to the Appendix 3?
No
Check whether bridge rectifier is normal
No
Replace the bridge rectifier
Yes
Replace the PFC module(If has)
No
Check the wiring of reactor or inductance
No
Reconnect the wiring
Yes
Check whether reactor or inductance is normal
No
Replace reactor or inductance
Yes
Replace the IPM board, If the IPM board and main board is in a board, replace the outdoor main PCB
Yes

5.8 PC40(Communication error between ODU main chip and compressor driven chip diagnosis and solution)

Description: The main PCB cannot detect the IPM board.

Recommended parts to prepare:

- Connection wires
- Outdoor PCB
- IPM module board
- Electric control box

Troubleshooting and repair:

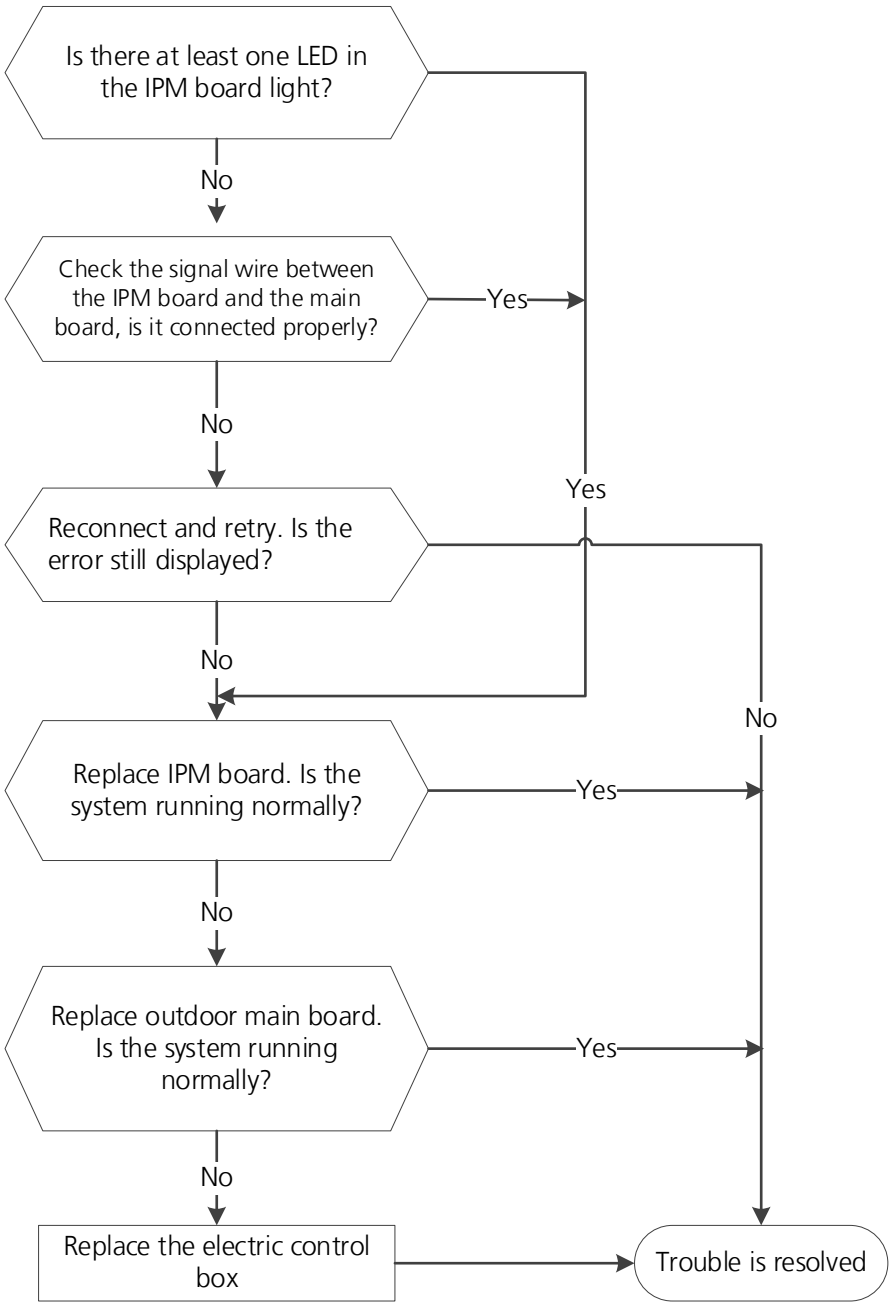

5.9 PC0F(PFC module protection diagnosis and solution)

Description: Outdoor PCB detects PFC signal is low voltage or DC voltage is lower than 340V for 6s when quick check.

Recommended parts to prepare:

- Connection wires
- Outdoor PCB
- Inductance
- PFC circuit or IPM module board

Troubleshooting and repair:

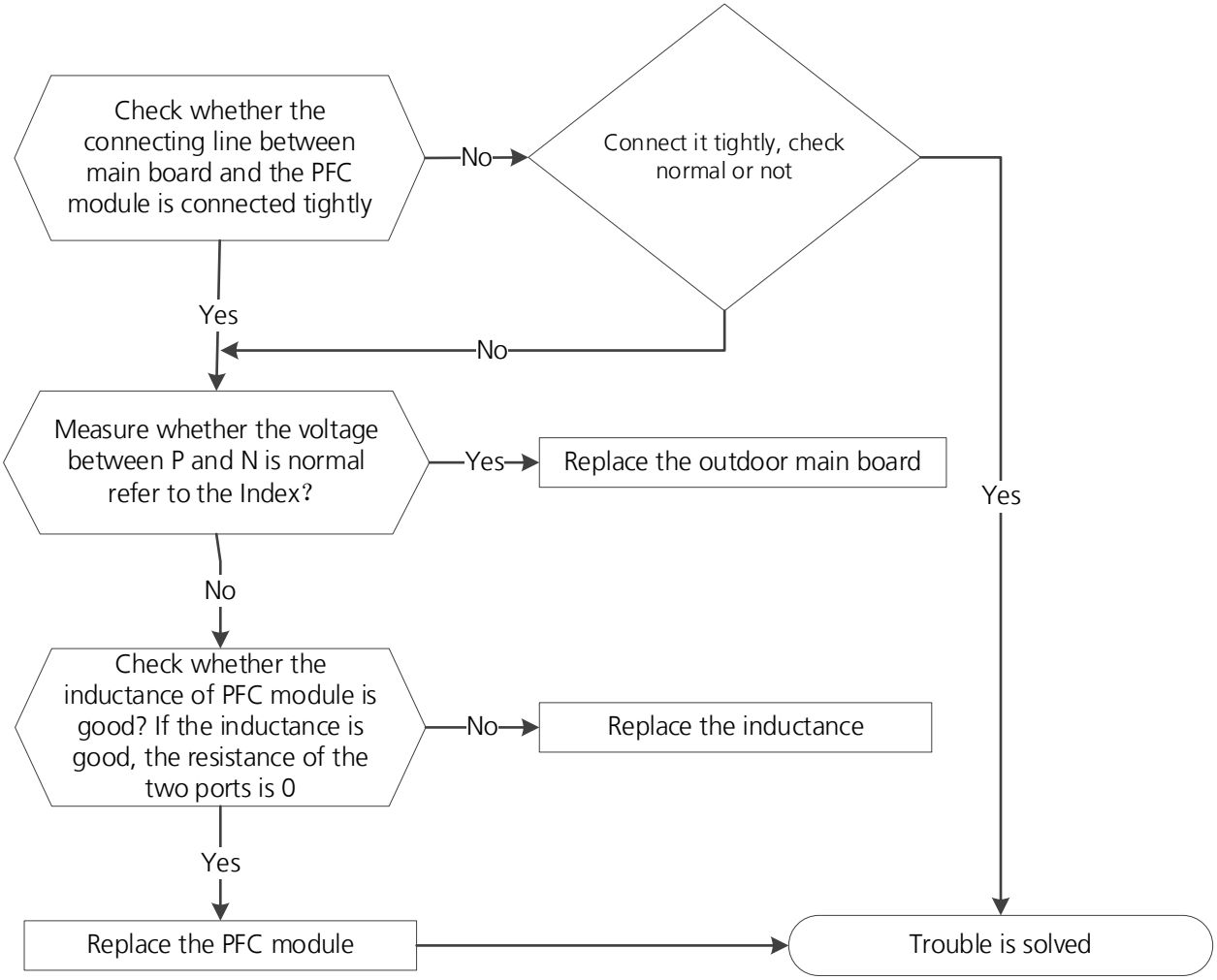

5.10 PC06(Discharge temperature protection of compressor diagnosis and solution)

Description: When the compressor discharge temperature (TP) is more than 115°C for 10 seconds, the compressor ceases operation and does not restart until TP is less than 90°C

Recommended parts to prepare:

- Connection wires
- Outdoor PCB
- Discharge temperature sensor
- Refrigerant

Troubleshooting and repair:

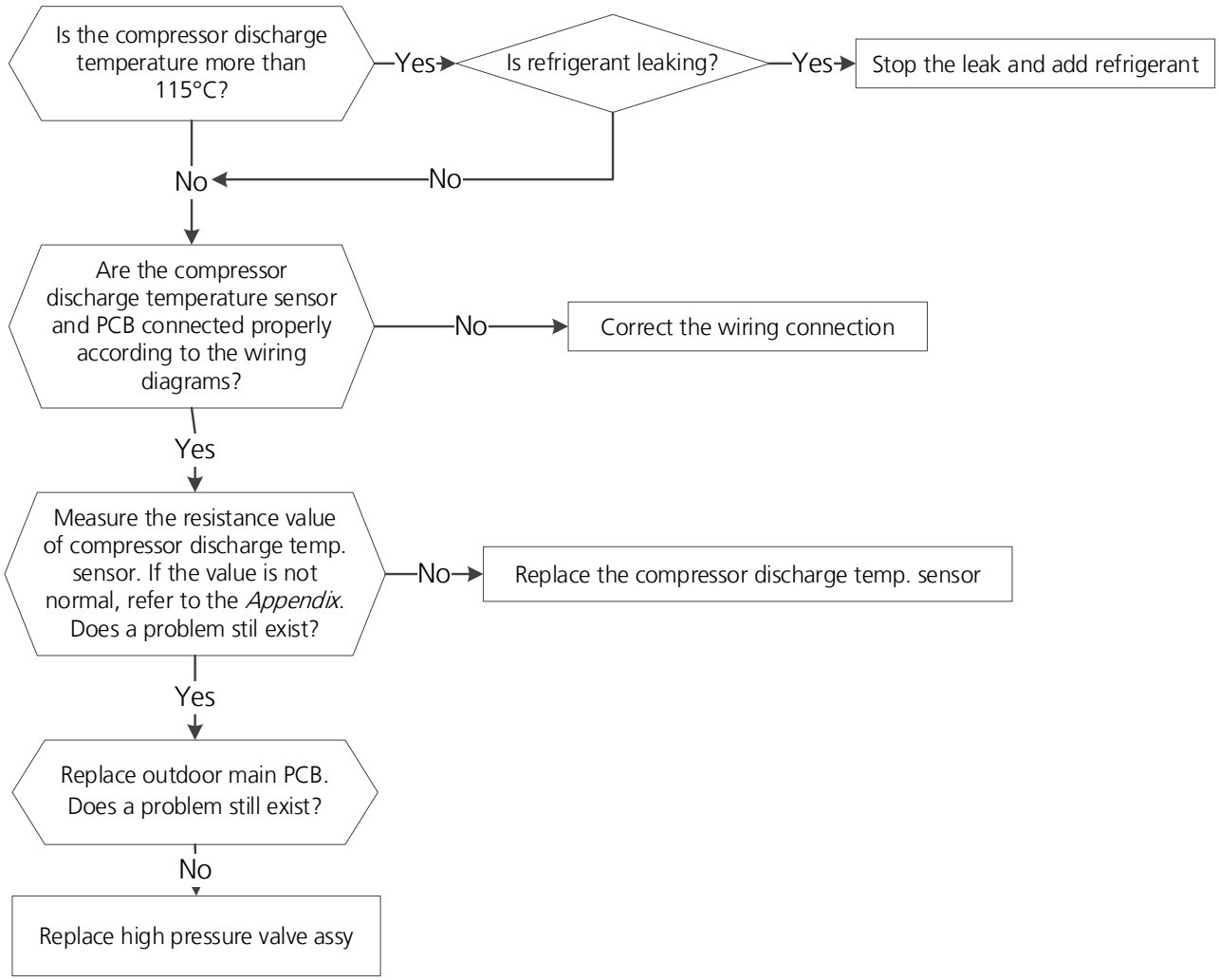

5.11 PC0A(High temperature protection of condenser diagnosis and solution)

Description: The unit will stop when condenser temperature is higher than 65°C, and runs again when it is less than 52°C

Recommended parts to prepare:

- Connection wires
- Condenser temperature sensor
- Outdoor fan
- Outdoor main PCB
- Refrigerant

Troubleshooting and repair:

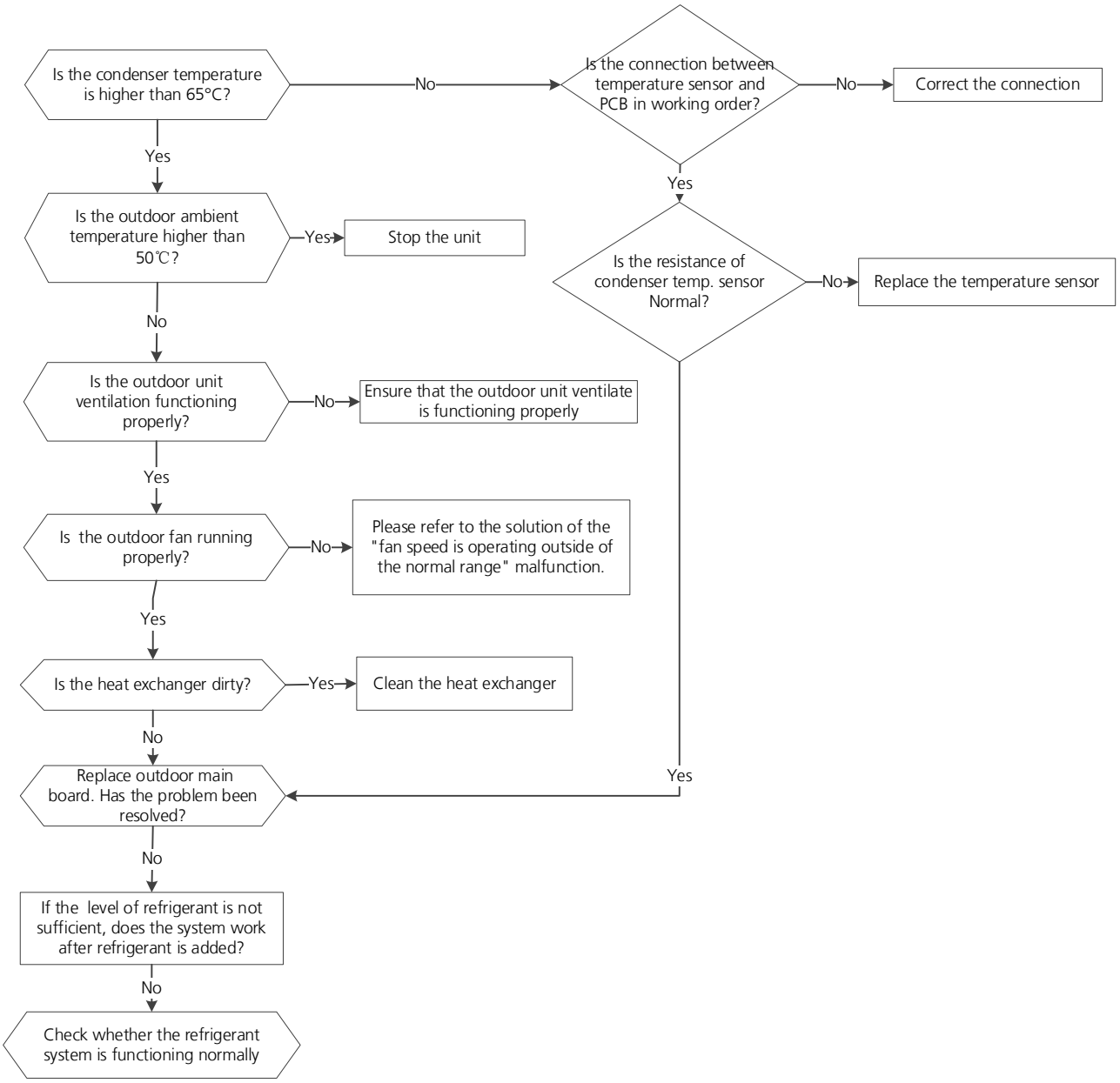

5.12 PC02/LC06 (Compressor top(or IPM) temp. protection/Refrigerant sensor error diagnosis and solution)

Description: For some models with overload protector, If the sampling voltage is not 5V, the LED will display the failure.

If the temperature of IPM module is higher than a certain value, the LED displays the failure code.

Models without overload protector should be diagnosed according to the second flowchart.

Recommended parts to prepare:

- Connection wires
- Outdoor PCB
- IPM module board
- High pressure protector
- System blockages

Troubleshooting and repair:

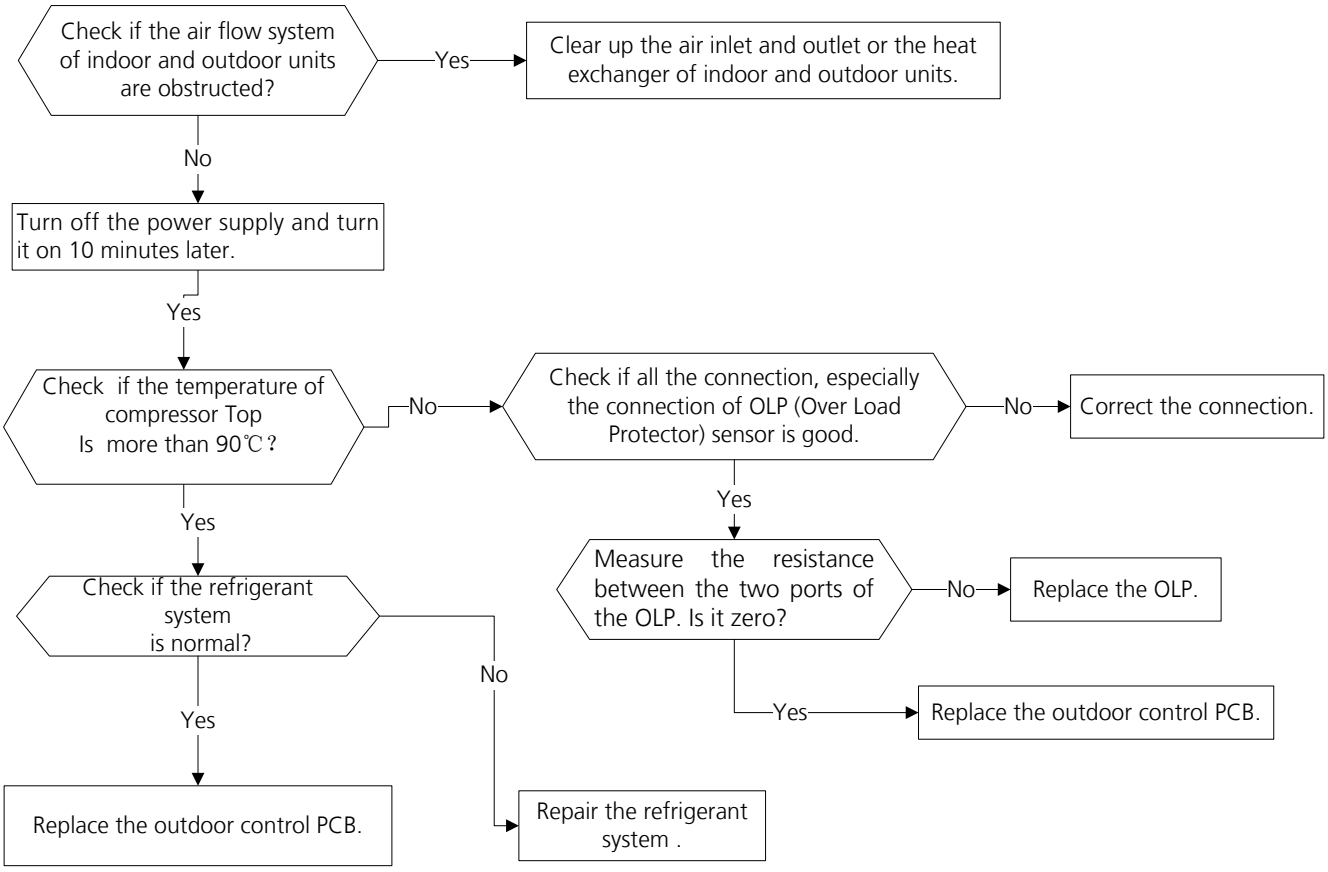

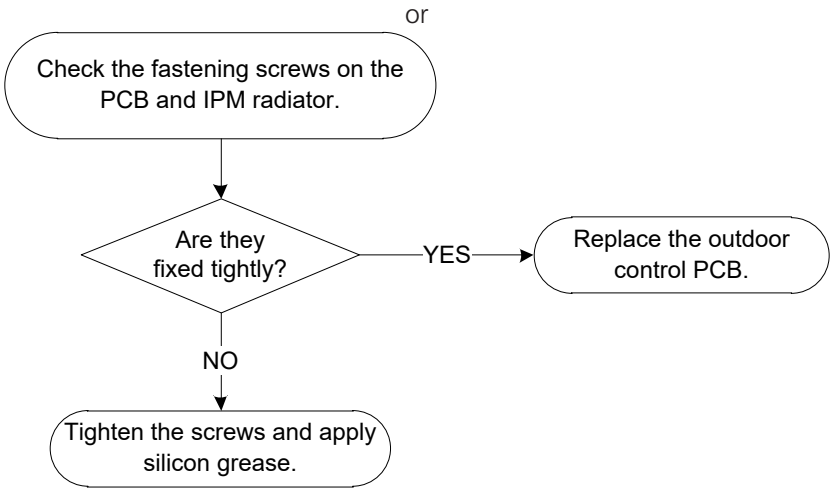
or
Check the fastening screws on the PCB and IPM radiator.
Are they fixed tightly?
YES
Replace the outdoor control PCB.
NO
Tighten the screws and apply silicon grease.

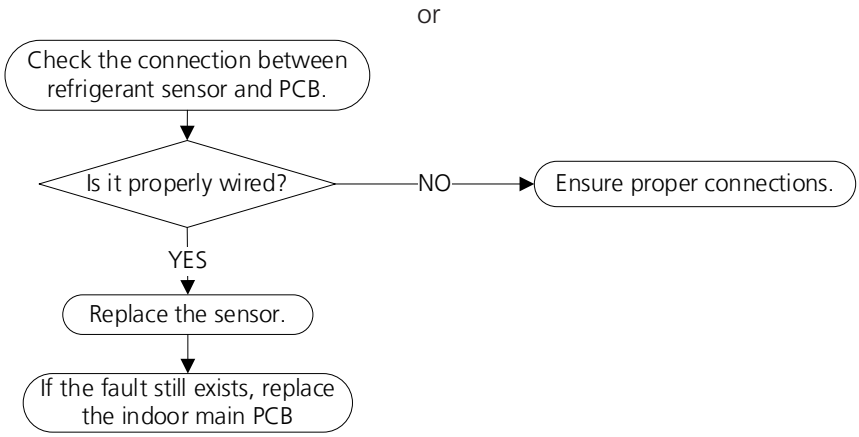
or
Check the connection between refrigerant sensor and PCB.
Is it properly wired?
NO
Ensure proper connections.
YES
Replace the sensor.
If the fault still exists, replace the indoor main PCB

5.13 PC30 (System high pressure protection diagnosis and solution)

Description: Outdoor pressure switch cut off the system because high pressure is higher than 4.4 MPa

Recommended parts to prepare:

- Connection wires
- Pressure switch
- Outdoor fan
- Outdoor main PCB

Troubleshooting and repair:

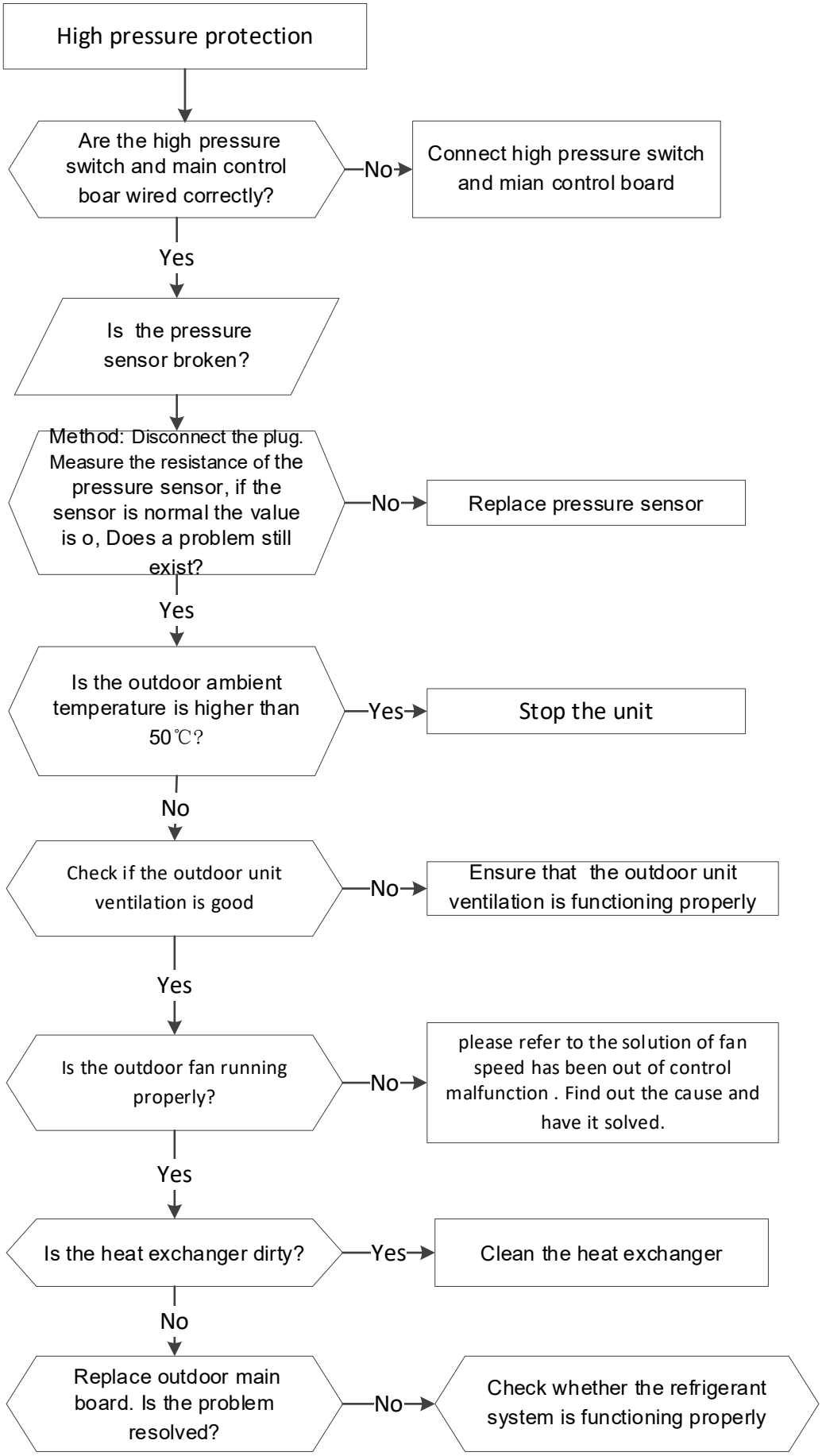
High pressure protection
Are the high pressure switch and main control boar wired correctly?
No
Connect high pressure switch and mian control board
Yes
Is the pressure sensor broken?
Method: Disconnect the plug. Measure the resistance of the pressure sensor, if the sensor is normal the value is o, Does a problem still exist?
No
Replace pressure sensor
Yes
Is the outdoor ambient temperature is higher than 50℃?
Yes
Stop the unit
No
Check if the outdoor unit ventilation is good
No
Ensure that the outdoor unit ventilation is functioning properly
Yes
Is the outdoor fan running properly?
No
please refer to the solution of fan speed has been out of control malfunction . Find out the cause and have it solved.
Yes
Is the heat exchanger dirty?
Yes
Clean the heat exchanger
No
Replace outdoor main board. Is the problem resolved?
No
Check whether the refrigerant system is functioning properly

5.14 PC31 (System low pressure protection diagnosis and solution)

Description: Outdoor pressure switch cut off the system because low pressure is lower than 0.13 MPa, the LED displays the failure code.

Recommended parts to prepare:

- Connection wires
- Outdoor PCB
- Pressure sensor
- Refrigerant

Troubleshooting and repair:

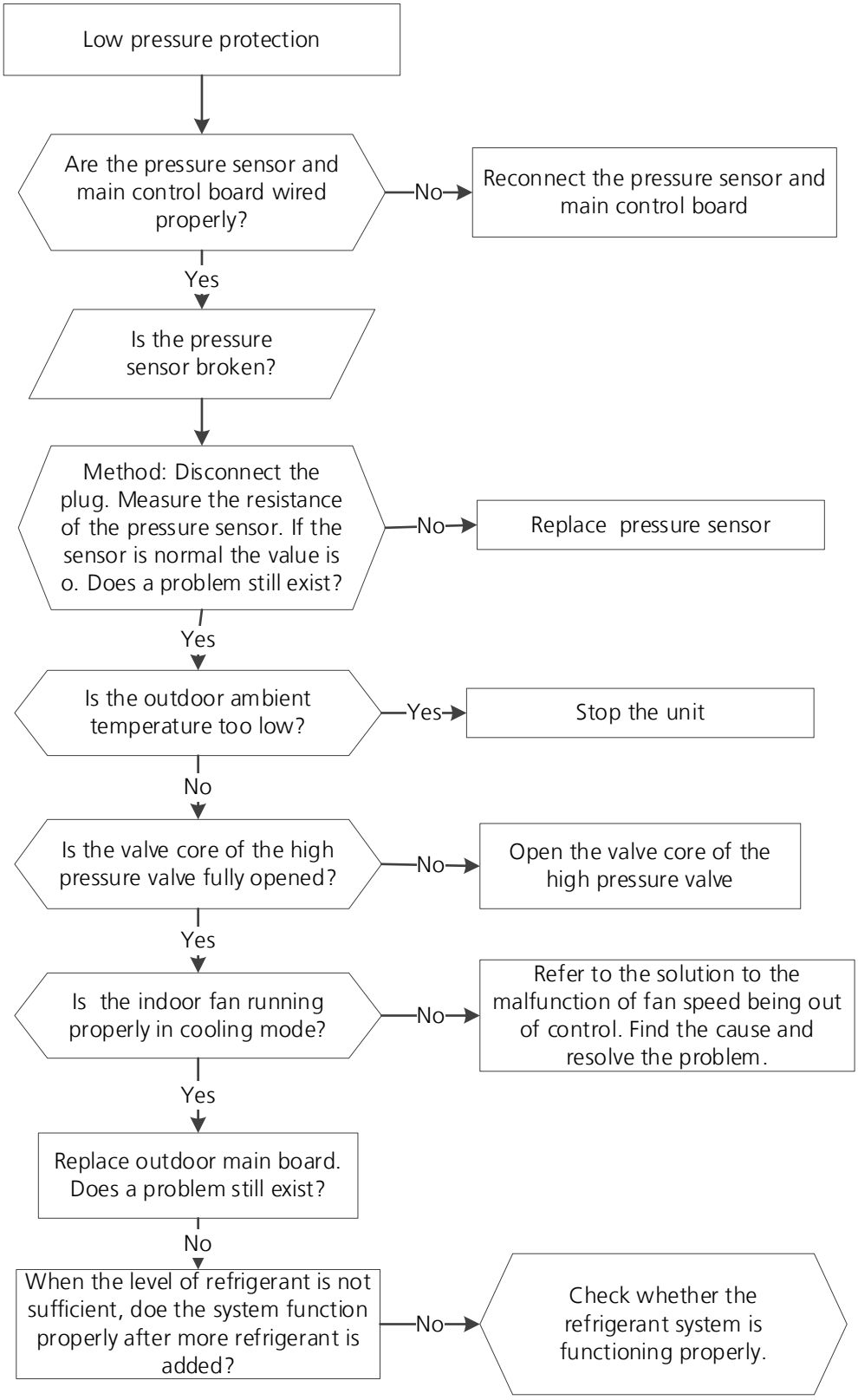
Low pressure protection
Are the pressure sensor and main control board wired properly?
No
Reconnect the pressure sensor and main control board
Yes
Is the pressure sensor broken?
Method: Disconnect the plug. Measure the resistance of the pressure sensor. If the sensor is normal the value is o. Does a problem still exist?
No
Replace pressure sensor
Yes
Is the outdoor ambient temperature too low?
Yes
Stop the unit
No
Is the valve core of the high pressure valve fully opened?
No
Open the valve core of the high pressure valve
Yes
Is the indoor fan running properly in cooling mode?
No
Refer to the solution to the malfunction of fan speed being out of control. Find the cause and resolve the problem.
Yes
Replace outdoor main board. Does a problem still exist?
No
When the level of refrigerant is not sufficient, doe the system function properly after more refrigerant is added?
No
Check whether the refrigerant system is functioning properly.

5.15 PC43 (ODU compressor lack phase protection diagnosis and solution)

Description: When the three-phase sampling current of the compressor is abnormal, especially when the current of one or more phases is always small and almost 0, the LED displays the failure code

Recommended parts to prepare:

- Connection wire
- Compressor
- Outdoor PCB

Troubleshooting and repair:

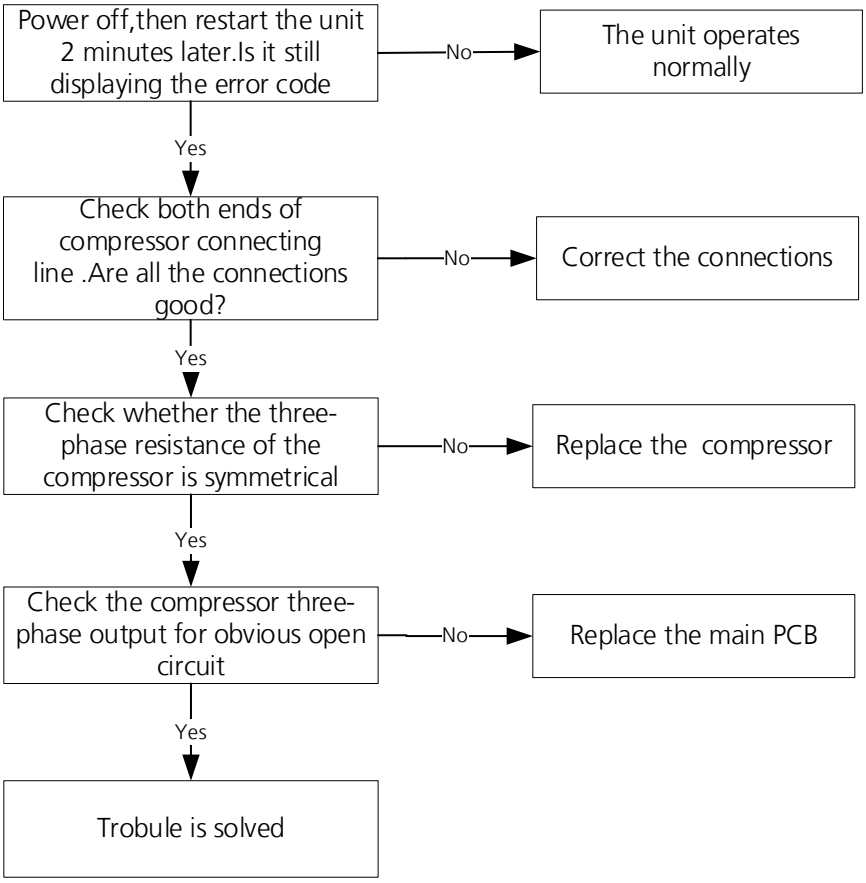

5.16 PC45 (ODU IR chip drive failure diagnosis and solution)

Description: When the IR chip detects its own parameter error, the LED displays the failure code when power on.

Recommended parts to prepare:

- Inverter module PCB.

Troubleshooting and repair:

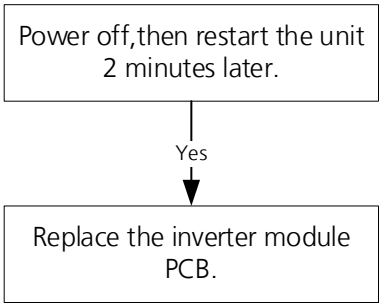

5.17 PC41(Outdoor compressor current sampling circuit failure diagnosis and solution)

Description: Three-phase sampling offset voltage error, the static bias voltage is normally 2.5V

Recommended parts to prepare:

- Outdoor main PCB

Troubleshooting and repair:

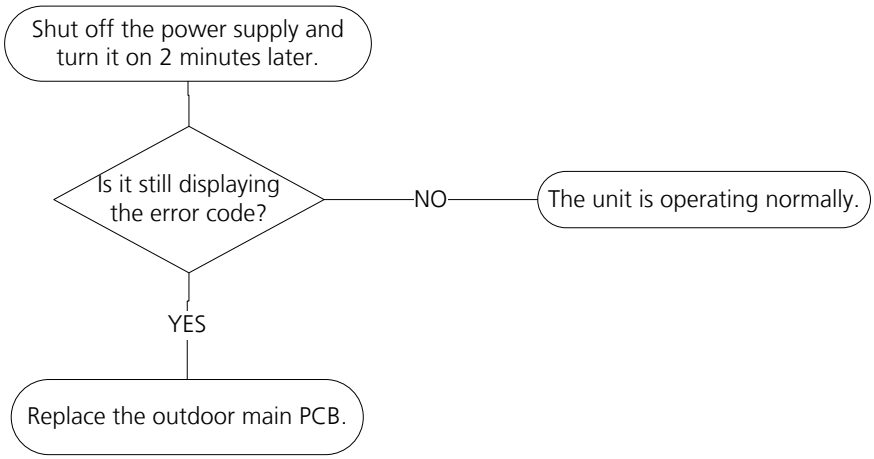

5.18 EC55(ODU IPM module temperature sensor malfunction diagnosis and solution)

Description: If the sampling voltage is 0V or 5V, the LED displays the failure code.

Recommended parts to prepare:

- IPM module PCB
- Connection wires
- Sensors
- Outdoor main PCB

Troubleshooting and repair:

If the radiator has no sensor, follow the steps below to resolve,

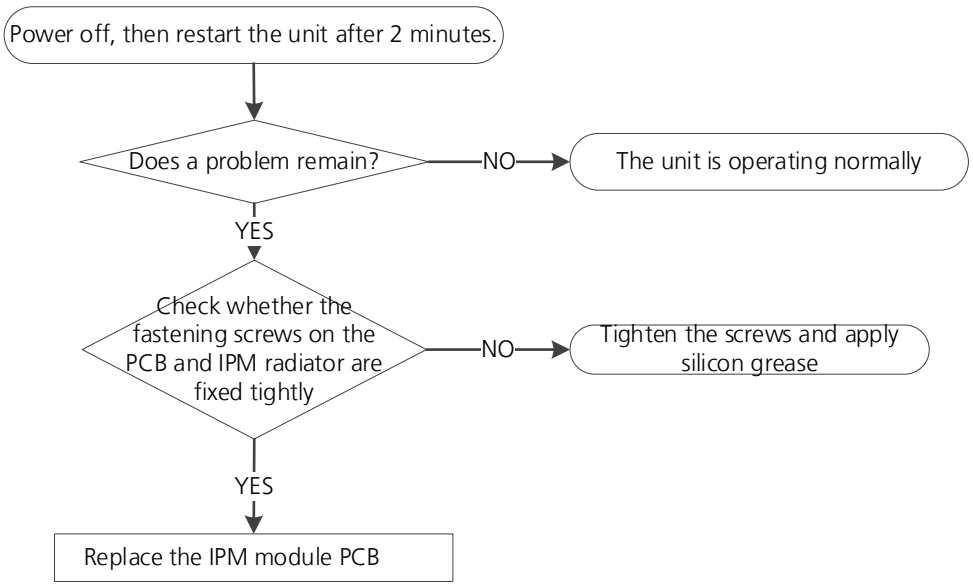

If the radiator has a sensor(TH), follow the steps below to resolve,

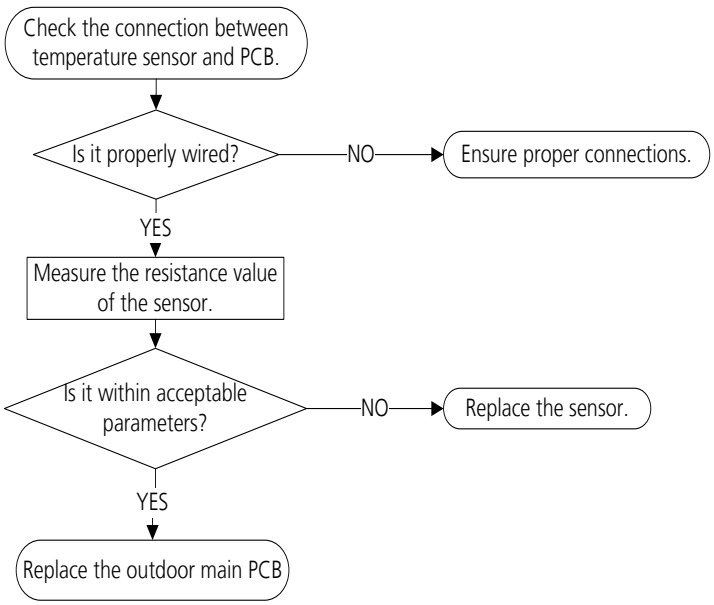

5.19 PH90(High temperature protection of evaporator diagnosis and solution)

Description: When evaporator coil temperature is more than 60°C in heating mode, the unit stops. It starts again only when the evaporator coil temperature is less than 52°C.

Recommended parts to prepare:

- Connection wires
- Evaporator coil temperature sensor (T2)
- Indoor fan
- Indoor main PCB

Troubleshooting and repair:

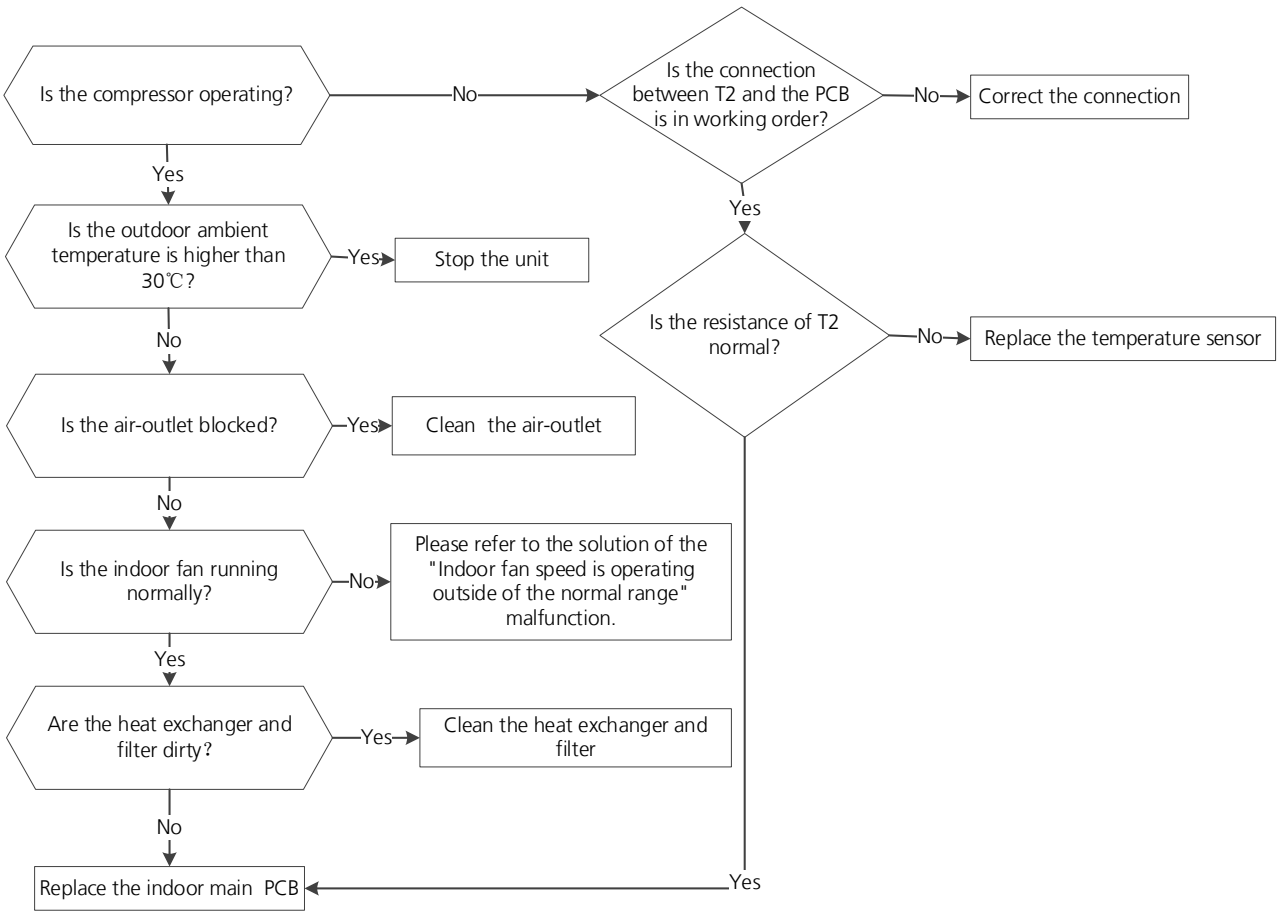

5.20 PH91(Low temperature protection of evaporator diagnosis and solution)

Description: When evaporator coil temperature is lower than 0°C in cooling mode or drying mode, the unit stops. It starts again only when the evaporator coil temperature is more than 5°C.

Recommended parts to prepare:

- Connection wires
- Evaporator coil temperature sensor (T2)
- Indoor main PCB

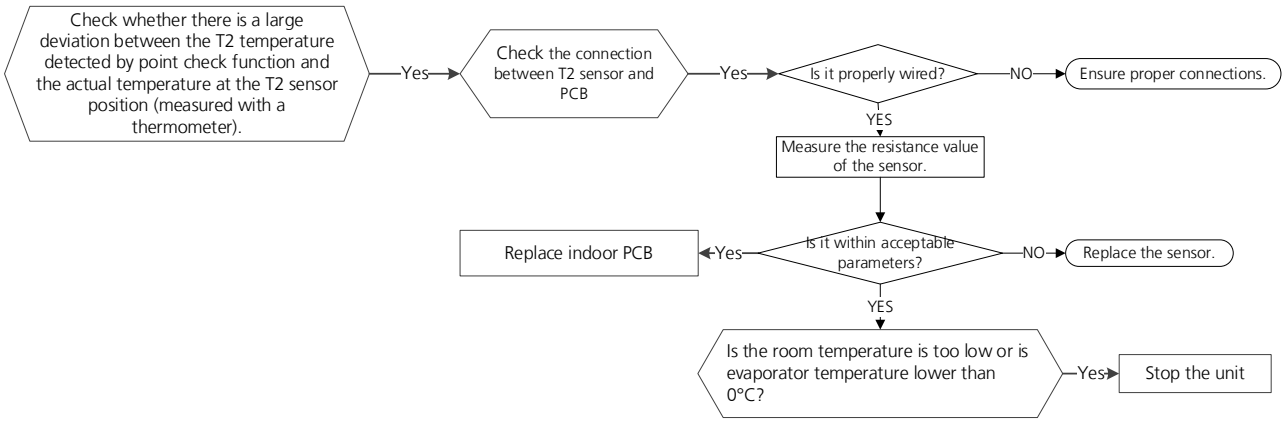

5.21 EC5C(High pressure sensor is in open circuit or has short circuited) diagnosis and solution

Description: If the sampling voltage is lower than 2V or higher than 254V, the LED displays the failure code.

Recommended parts to prepare:

- Connection wires
- Sensor
- Outdoor PCB

Troubleshooting and repair:

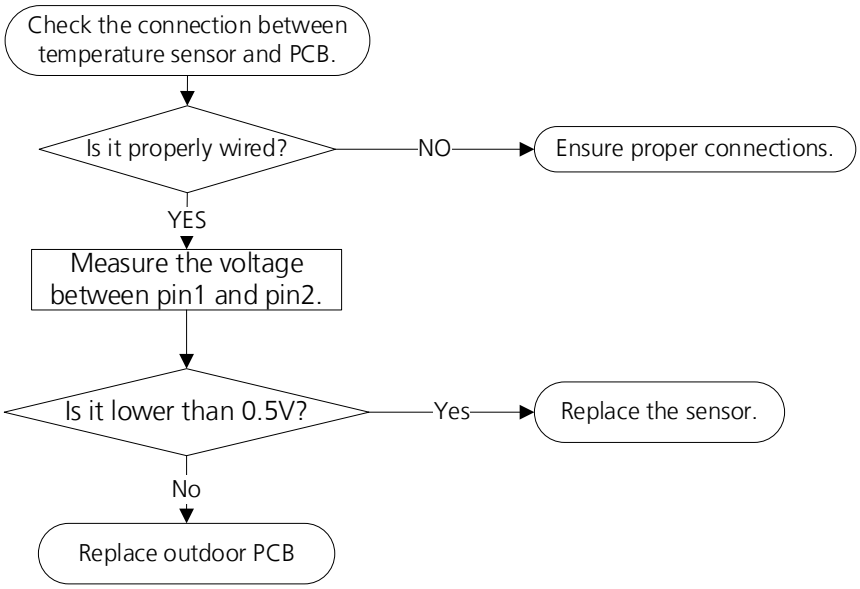

5.22 EL16(Communication malfunction between adapter board and outdoor main board diagnosis and solution)

Description: The adapter PCB cannot detect the main control board.

Recommended parts to prepare:

- Connection wires
- Adapter board
- Outdoor main PCB

Troubleshooting and repair:

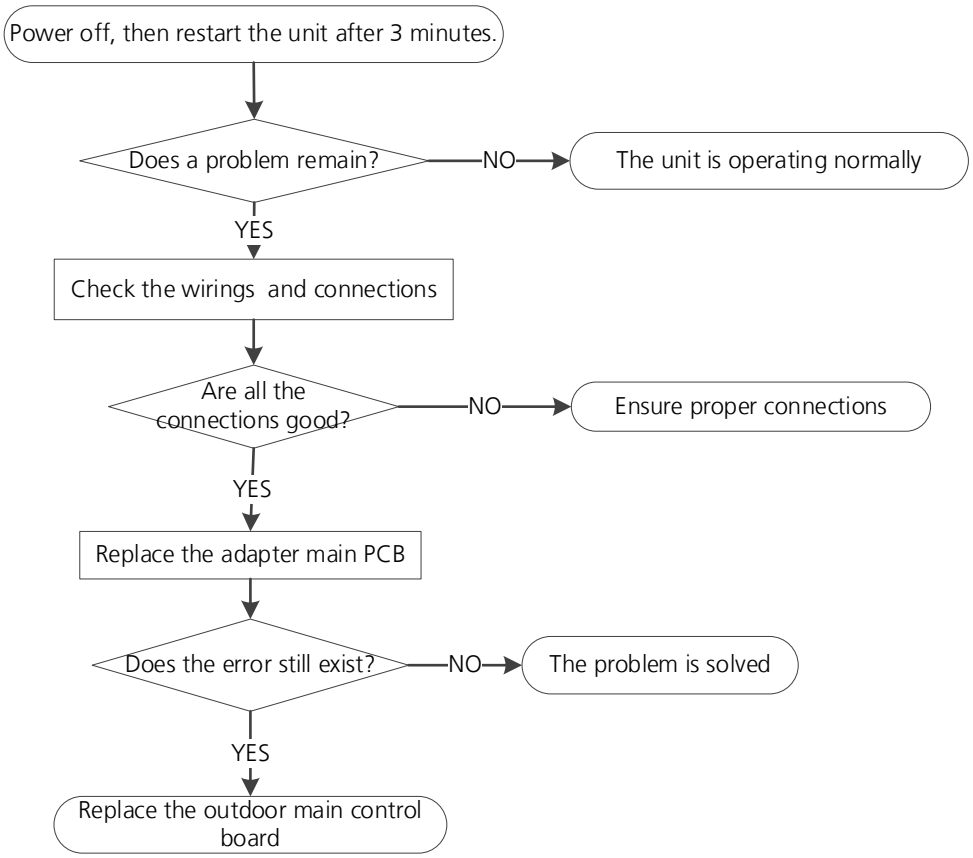

6. Check Procedures

6.1 Temperature Sensor Check

WARNING

Be sure to turn off all power supplies or disconnect all wires to avoid electric shock.
Operate after compressor and coil have returned to normal temperature in case of injury.

1. Disconnect the temperature sensor from PCB (Refer to Chapter 5&6. Indoor&Outdoor Unit Disassembly).
2. Measure the resistance value of the sensor using a multi-meter.
3. Check corresponding temperature sensor resistance value table (Refer to Chapter Appendix).

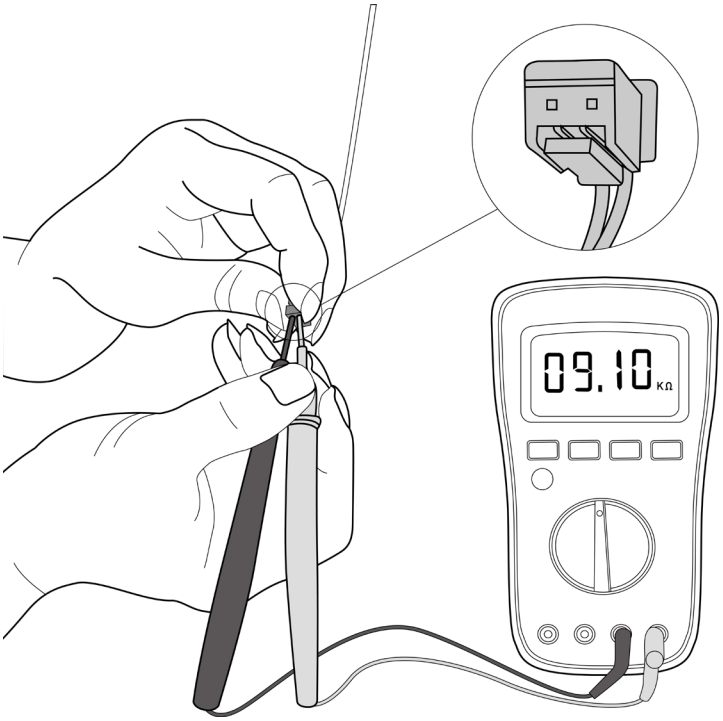

Note: The picture and the value are only for reference, actual condition and specific value may vary.

6.2 Compressor Check

1. Disconnect the compressor power cord from outdoor PCB (Refer to Chapter 6. Outdoor Unit Disassembly)).
2. Measure the resistance value of each winding using a multi-meter.
3. Check the resistance value of each winding in the following table.

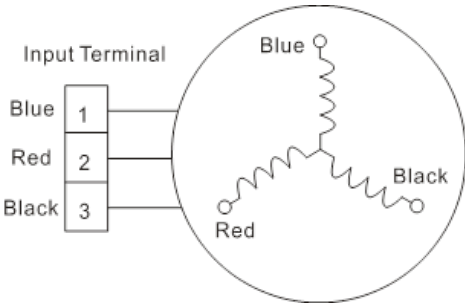

Resistance Value	KSK103D33UEZ3	KSN140D58UFZ	KTF250D22UMT	KTN110D42UFZ	KTF420D62UNT
Blue-Red	2.13Ω	1.86Ω	0.75Ω	1.82Ω	0.86Ω
Blue-Black					
Red-Black					

Resistance Value	KTN150D30UFZA	KTM240D46UKT2	KTF310D43UMT	ETPQ420D1UMUA ETPQ440D1UMUB KTQ420D1UMU EKPQ440D1UMUB	MTH356UKRC8FQL
Blue-Red	1.02Ω	1.04Ω	0.65Ω	0.37Ω	0.487Ω
Blue-Black					
Red-Black					

Resistance Value	MTH550UKPC8FU				
Blue-Red	0.295Ω				
Blue-Black					
Red-Black					

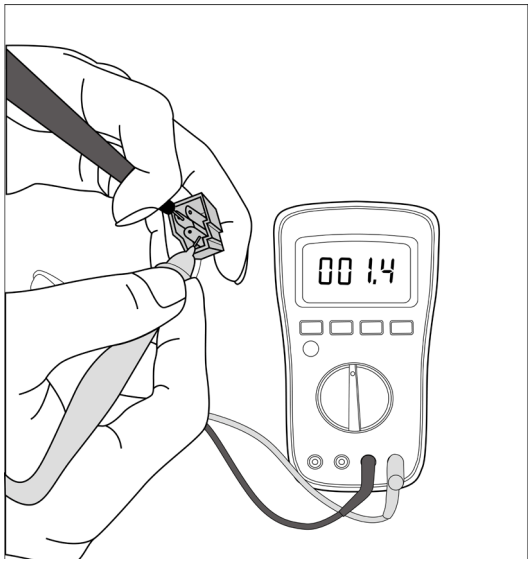

Note: The picture and the value are only for reference, actual condition and specific value may vary.

6.3 IPM Continuity Check

WARNING

Electricity remains in capacitors even when the power supply is off.
Ensure the capacitors are fully discharged before troubleshooting.

1. Turn off outdoor unit and disconnect power supply.
2. Discharge electrolytic capacitors and ensure all energy-storage unit has been discharged.
3. Disassemble outdoor PCB or disassemble IPM board.
4. Measure the resistance value between P and U(V, W, N); U(V, W) and N.

Digital tester		Resistance value	Digital tester		Resistance value
(+)Red	(-)Black	∞ (Several MΩ)	(+)Red	(-)Black	∞ (Several MΩ)
P	N		U	N	
	U		V		
	V		W		
	W		-		

Or test the conductivity of IPM with diode mode.

Needle-type Tester		Normal Value	Needle-type Tester		Normal Value
Red	Black		Red	Black	
P	U	Open-circuit	N	U	0.3-0.5V
	V			V	
	W			W	

Needle-type Tester		Normal Value	Needle-type Tester		Normal Value
Black	Red		Black	Red	
P	U	0.3-0.5V	N	U	Open-circuit
	V			V	
	W			W	

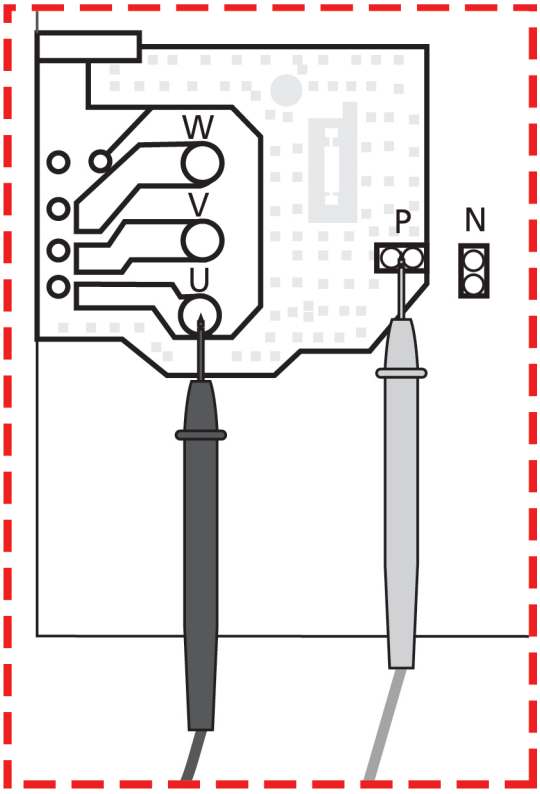

Note: The picture and the value are only for reference, actual condition and specific value may vary.

6.4 Normal voltage of P and N

208-230V(1-phase)		
In standby		
around 310VDC		
In operation		
With passive PFC module	With partial active PFC module	With fully active PFC module
>200VDC	>310VDC	>370VDC

6.5 Reactor Check

Measure the resistance and voltage (to ground) of the reactor. The normal resistance should be around 0.1 ohm. Otherwise, the reactor must have malfunction.

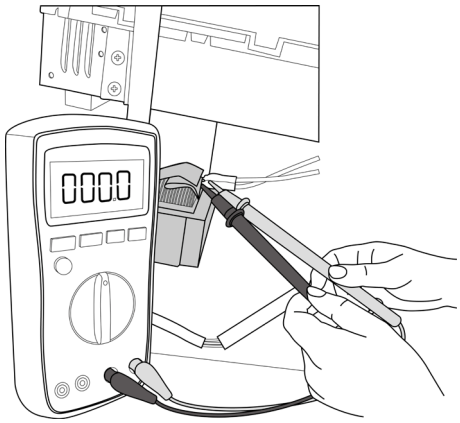

6.6 4-way valve Check

1.Power on, use a digital tester to measure the voltage, when the unit operates in cooling, it is 0V. When the unit operates in heating, it is about equal to power supply voltage.

If the value of the voltage is not in the range, the PCB must have problems and need to be replaced.

2 Turn off the power, use a digital tester to measure the resistance. The value should be 1.8~2.5 KΩ.

6.7 EXV Check

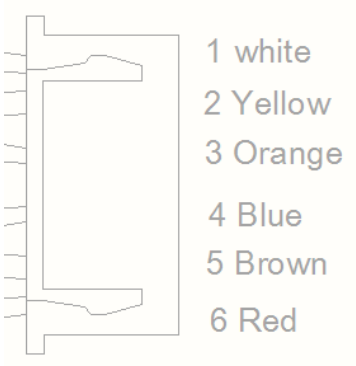

1. Turn off outdoor unit and disconnect power supply.

2. Disconnect the connectors of EXV.

3. Measure the resistance value between Red and Blue(Yellow); Brown and Orange(White).

Resistance to EXV coil

Color of lead wire	Normal Value
Red- Blue	About 50Ω
Red - Yellow	
Brown-Orange	
Brown-White	

Appendix

Contents

i) Temperature Sensor Resistance Value Table for TP (°C --K) 2

ii) Other Temperature Sensors Resistance Value Table (°C – K) 3

iii) Pressure On Service Port 4

iV) System Pressure Table 6

i) Temperature Sensor Resistance Value Table for TP (°C --K)

°C	°F	K Ohm	°C	°F	K Ohm	°C	°F	K Ohm	°C	°F	K Ohm
°C	°F	K Ohm	°C	°F	K Ohm	°C	°F	K Ohm	°C	°F	K Ohm
-20	-4	542.7	20	68	68.66	60	140	13.59	100	212	3.702
-19	-2	511.9	21	70	65.62	61	142	13.11	101	214	3.595
-18	0	483	22	72	62.73	62	144	12.65	102	216	3.492
-17	1	455.9	23	73	59.98	63	145	12.21	103	217	3.392
-16	3	430.5	24	75	57.37	64	147	11.79	104	219	3.296
-15	5	406.7	25	77	54.89	65	149	11.38	105	221	3.203
-14	7	384.3	26	79	52.53	66	151	10.99	106	223	3.113
-13	9	363.3	27	81	50.28	67	153	10.61	107	225	3.025
-12	10	343.6	28	82	48.14	68	154	10.25	108	226	2.941
-11	12	325.1	29	84	46.11	69	156	9.902	109	228	2.86
-10	14	307.7	30	86	44.17	70	158	9.569	110	230	2.781
-9	16	291.3	31	88	42.33	71	160	9.248	111	232	2.704
-8	18	275.9	32	90	40.57	72	162	8.94	112	234	2.63
-7	19	261.4	33	91	38.89	73	163	8.643	113	235	2.559
-6	21	247.8	34	93	37.3	74	165	8.358	114	237	2.489
-5	23	234.9	35	95	35.78	75	167	8.084	115	239	2.422
-4	25	222.8	36	97	34.32	76	169	7.82	116	241	2.357
-3	27	211.4	37	99	32.94	77	171	7.566	117	243	2.294
-2	28	200.7	38	100	31.62	78	172	7.321	118	244	2.233
-1	30	190.5	39	102	30.36	79	174	7.086	119	246	2.174
0	32	180.9	40	104	29.15	80	176	6.859	120	248	2.117
1	34	171.9	41	106	28	81	178	6.641	121	250	2.061
2	36	163.3	42	108	26.9	82	180	6.43	122	252	2.007
3	37	155.2	43	109	25.86	83	181	6.228	123	253	1.955
4	39	147.6	44	111	24.85	84	183	6.033	124	255	1.905
5	41	140.4	45	113	23.89	85	185	5.844	125	257	1.856
6	43	133.5	46	115	22.89	86	187	5.663	126	259	1.808
7	45	127.1	47	117	22.1	87	189	5.488	127	261	1.762
8	46	121	48	118	21.26	88	190	5.32	128	262	1.717
9	48	115.2	49	120	20.46	89	192	5.157	129	264	1.674
10	50	109.8	50	122	19.69	90	194	5	130	266	1.632
11	52	104.6	51	124	18.96	91	196	4.849			
12	54	99.69	52	126	18.26	92	198	4.703			
13	55	95.05	53	127	17.58	93	199	4.562			
14	57	90.66	54	129	16.94	94	201	4.426			
15	59	86.49	55	131	16.32	95	203	4.294			
16	61	82.54	56	133	15.73	96	205	4.167			
17	63	78.79	57	135	15.16	97	207	4.045			
18	64	75.24	58	136	14.62	98	208	3.927			
19	66	71.86	59	138	14.09	99	210	3.812			

ii) Other Temperature Sensors Resistance Value Table (°C – K)

°C	°F	K Ohm	°C	°F	K Ohm	°C	°F	K Ohm	°C	°F	K Ohm
-20	-4	115.266	20	68	12.6431	60	140	2.35774	100	212	0.62973
-19	-2	108.146	21	70	12.0561	61	142	2.27249	101	214	0.61148
-18	0	101.517	22	72	11.5	62	144	2.19073	102	216	0.59386
-17	1	96.3423	23	73	10.9731	63	145	2.11241	103	217	0.57683
-16	3	89.5865	24	75	10.4736	64	147	2.03732	104	219	0.56038
-15	5	84.219	25	77	10	65	149	1.96532	105	221	0.54448
-14	7	79.311	26	79	9.55074	66	151	1.89627	106	223	0.52912
-13	9	74.536	27	81	9.12445	67	153	1.83003	107	225	0.51426
-12	10	70.1698	28	82	8.71983	68	154	1.76647	108	226	0.49989
-11	12	66.0898	29	84	8.33566	69	156	1.70547	109	228	0.486
-10	14	62.2756	30	86	7.97078	70	158	1.64691	110	230	0.47256
-9	16	58.7079	31	88	7.62411	71	160	1.59068	111	232	0.45957
-8	18	56.3694	32	90	7.29464	72	162	1.53668	112	234	0.44699
-7	19	52.2438	33	91	6.98142	73	163	1.48481	113	235	0.43482
-6	21	49.3161	34	93	6.68355	74	165	1.43498	114	237	0.42304
-5	23	46.5725	35	95	6.40021	75	167	1.38703	115	239	0.41164
-4	25	44	36	97	6.13059	76	169	1.34105	116	241	0.4006
-3	27	41.5878	37	99	5.87359	77	171	1.29078	117	243	0.38991
-2	28	39.8239	38	100	5.62961	78	172	1.25423	118	244	0.37956
-1	30	37.1988	39	102	5.39689	79	174	1.2133	119	246	0.36954
0	32	35.2024	40	104	5.17519	80	176	1.17393	120	248	0.35982
1	34	33.3269	41	106	4.96392	81	178	1.13604	121	250	0.35042
2	36	31.5635	42	108	4.76253	82	180	1.09958	122	252	0.3413
3	37	29.9058	43	109	4.5705	83	181	1.06448	123	253	0.33246
4	39	28.3459	44	111	4.38736	84	183	1.03069	124	255	0.3239
5	41	26.8778	45	113	4.21263	85	185	0.99815	125	257	0.31559
6	43	25.4954	46	115	4.04589	86	187	0.96681	126	259	0.30754
7	45	24.1932	47	117	3.88673	87	189	0.93662	127	261	0.29974
8	46	22.5662	48	118	3.73476	88	190	0.90753	128	262	0.29216
9	48	21.8094	49	120	3.58962	89	192	0.8795	129	264	0.28482
10	50	20.7184	50	122	3.45097	90	194	0.85248	130	266	0.2777
11	52	19.6891	51	124	3.31847	91	196	0.82643	131	268	0.27078
12	54	18.7177	52	126	3.19183	92	198	0.80132	132	270	0.26408
13	55	17.8005	53	127	3.07075	93	199	0.77709	133	271	0.25757
14	57	16.9341	54	129	2.95896	94	201	0.75373	134	273	0.25125
15	59	16.1156	55	131	2.84421	95	203	0.73119	135	275	0.24512
16	61	15.3418	56	133	2.73823	96	205	0.70944	136	277	0.23916
17	63	14.6181	57	135	2.63682	97	207	0.68844	137	279	0.23338
18	64	13.918	58	136	2.53973	98	208	0.66818	138	280	0.22776
19	66	13.2631	59	138	2.44677	99	210	0.64862	139	282	0.22231

iii) Pressure On Service Port

Cooling chart(R454B):

°F(°C)	ODU(DB) / IDU(DB/WB)	0(-17)	5(-15)	15 (-9.44)	45 (7.22)	75 (23.89)	85 (29.44)	95 (35)	105 (40.56)	115 (46.11)	120 (48.89)
BAR	70/59 (21.11/15)	5.9	6.0	6.7	7.3	7.5	7.2	7.4	7.9	9.2	9.7
	75/63 (23.89/17.22)	6.1	6.2	7.2	7.9	7.9	7.6	7.9	8.3	9.8	10.2
	80/67 (26.67/19.44)	6.5	6.6	7.8	8.7	8.5	8.2	8.3	8.8	10.2	10.8
	90/73 (32.22/22.78)	7.1	7.2	8.8	9.6	9.4	8.7	9.2	9.7	11.3	11.9
PSI	70/59 (21.11/15)	85	86	97	106	109	104	108	114	134	140
	75/63 (23.89/17.22)	89	90	105	114	114	110	115	121	142	148
	80/67 (26.67/19.44)	94	95	113	126	123	118	121	127	148	157
	90/73 (32.22/22.78)	102	104	127	139	136	126	133	140	164	172
MPa	70/59 (21.11/15)	0.59	0.60	0.67	0.73	0.75	0.72	0.74	0.79	0.92	0.97
	75/63 (23.89/17.22)	0.61	0.62	0.72	0.79	0.79	0.76	0.79	0.83	0.98	1.02
	80/67 (26.67/19.44)	0.65	0.66	0.78	0.87	0.85	0.82	0.83	0.88	1.02	1.08
	90/73 (32.22/22.78)	0.71	0.72	0.88	0.96	0.94	0.87	0.92	0.97	1.13	1.19

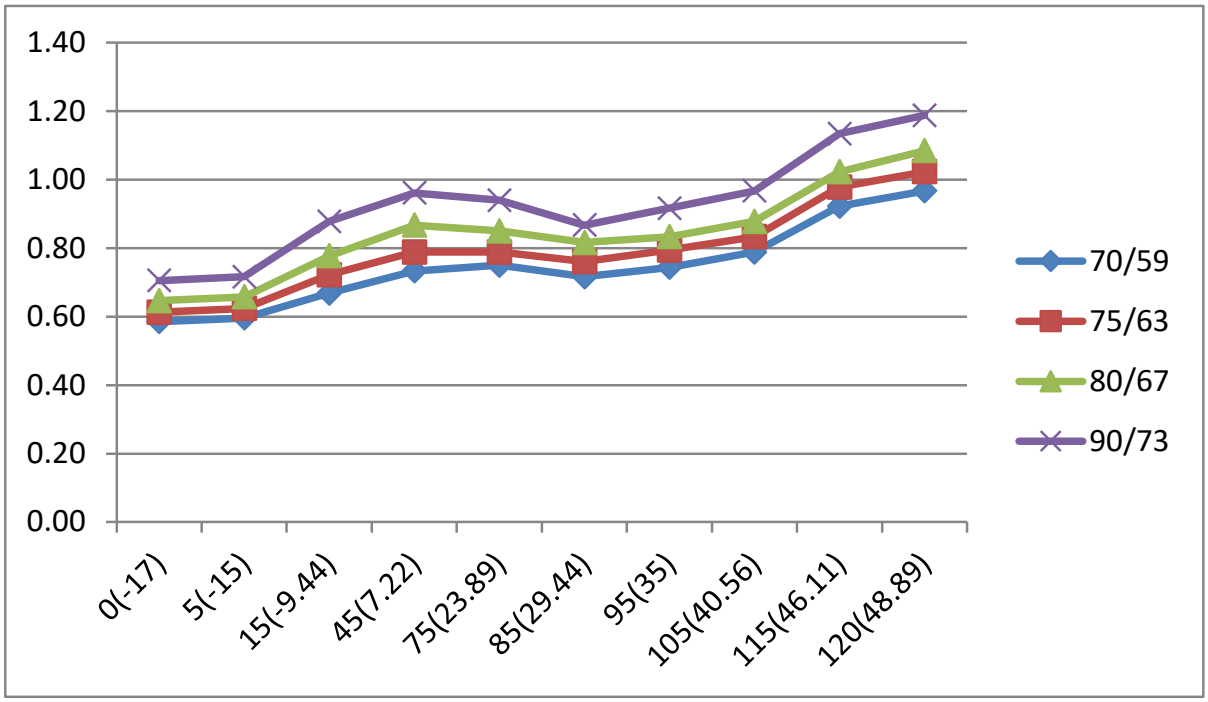

Heating chart(R454B):

°F(°C)	ODU(DB/WB) / IDU(DB)	57/53 (13.89/11.67)	47/43 (8.33/6.11)	37/33 (2.78/0.56)	27/23 (-2.78/-5)	17/13 (-8.33/-10.56)	0/- (-17)	-17 (-27)
BAR	55(12.78)	27.7	26.1	23.1	20.9	19.0	16.9	15.1
	65(18.33)	29.8	27.5	24.3	23.2	21.3	18.7	17.4
	75(23.89)	31.0	28.8	25.4	24.0	22.8	19.6	18.3
PSI	55(12.78)	402	378	335	303	275	245	218
	65(18.33)	432	398	352	337	309	271	252
	75(23.89)	449	418	368	348	330	284	265
MPa	55(12.78)	2.77	2.61	2.31	2.09	1.90	1.69	1.51
	65(18.33)	2.98	2.75	2.43	2.32	2.13	1.87	1.74
	75(23.89)	3.10	2.88	2.54	2.40	2.28	1.96	1.83

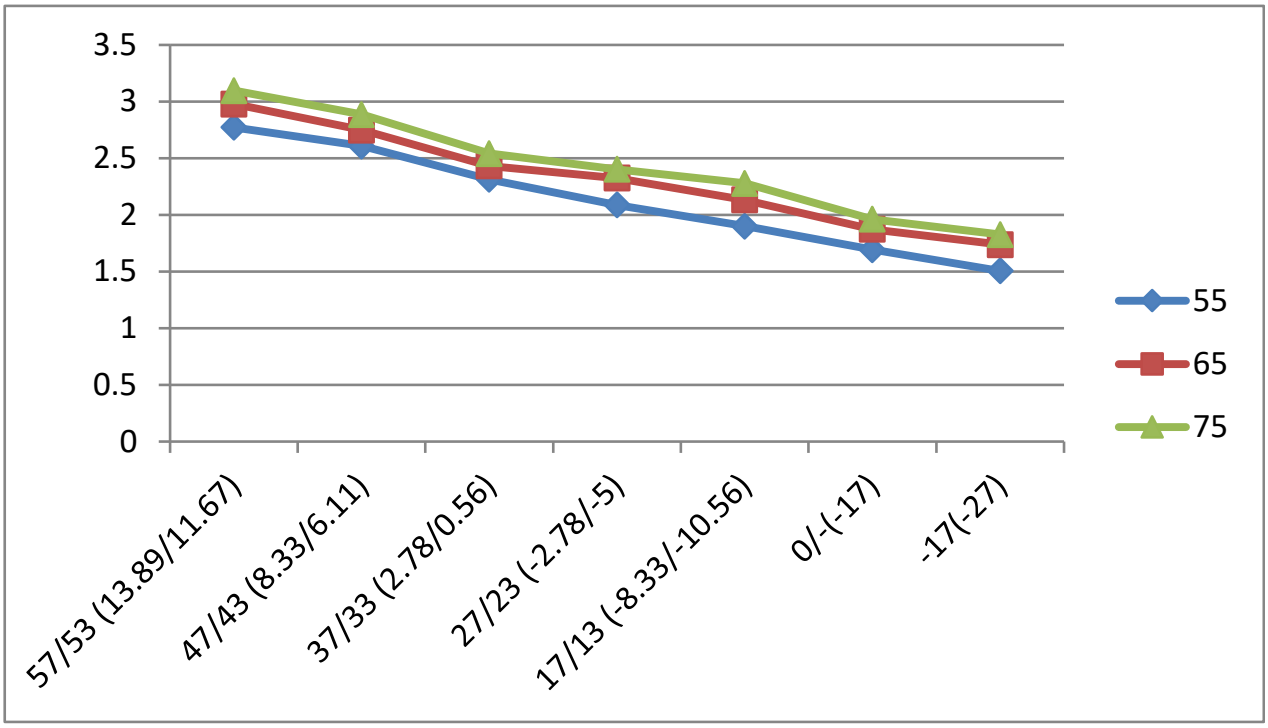

iV) System Pressure Table-R454B

Pressure			Temperature		Pressure			Temperature	
Kpa	bar	PSI	°C	°F	Kpa	bar	PSI	°C	°F
58.196	0.58	8.44	-60	-76	935.23	9.35	135.64	8	46.4
61.517	0.62	8.92	-59	-74.2	963.75	9.64	139.78	9	48.2
64.988	0.65	9.43	-58	-72.4	992.93	9.93	144.01	10	50
68.615	0.69	9.95	-57	-70.6	1022.8	10.23	148.34	11	51.8
72.402	0.72	10.50	-56	-68.8	1053.3	10.53	152.76	12	53.6
76.354	0.76	11.07	-55	-67	1084.5	10.85	157.29	13	55.4
80.478	0.80	11.67	-54	-65.2	1116.4	11.16	161.91	14	57.2
84.776	0.85	12.30	-53	-63.4	1149	11.49	166.64	15	59
89.256	0.89	12.95	-52	-61.6	1182.3	11.82	171.47	16	60.8
93.923	0.94	13.62	-51	-59.8	1216.3	12.16	176.40	17	62.6
98.781	0.99	14.33	-50	-58	1251.1	12.51	181.45	18	64.4
103.84	1.04	15.06	-49	-56.2	1286.6	12.87	186.60	19	66.2
109.1	1.09	15.82	-48	-54.4	1322.8	13.23	191.85	20	68
114.56	1.15	16.61	-47	-52.6	1359.9	13.60	197.23	21	69.8
120.25	1.20	17.44	-46	-50.8	1397.7	13.98	202.71	22	71.6
126.15	1.26	18.30	-45	-49	1436.3	14.36	208.31	23	73.4
132.28	1.32	19.18	-44	-47.2	1475.7	14.76	214.02	24	75.2
138.64	1.39	20.11	-43	-45.4	1515.9	15.16	219.85	25	77
145.24	1.45	21.06	-42	-43.6	1557	15.57	225.82	26	78.8
152.09	1.52	22.06	-41	-41.8	1598.9	15.99	231.89	27	80.6
159.18	1.59	23.09	-40	-40	1641.6	16.42	238.09	28	82.4
166.54	1.67	24.15	-39	-38.2	1685.2	16.85	244.41	29	84.2
174.15	1.74	25.26	-38	-36.4	1729.7	17.30	250.86	30	86
182.04	1.82	26.40	-37	-34.6	1775	17.75	257.43	31	87.8
190.2	1.90	27.59	-36	-32.8	1821.3	18.21	264.15	32	89.6
198.65	1.99	28.81	-35	-31	1868.4	18.68	270.98	33	91.4
207.39	2.07	30.08	-34	-29.2	1916.5	19.17	277.95	34	93.2
216.42	2.16	31.39	-33	-27.4	1965.6	19.66	285.08	35	95
225.76	2.26	32.74	-32	-25.6	2015.5	20.16	292.31	36	96.8
235.41	2.35	34.14	-31	-23.8	2066.5	20.67	299.71	37	98.6
245.37	2.45	35.59	-30	-22	2118.4	21.18	307.24	38	100.4
255.67	2.56	37.08	-29	-20.2	2171.3	21.71	314.91	39	102.2
266.29	2.66	38.62	-28	-18.4	2225.2	22.25	322.73	40	104
277.25	2.77	40.21	-27	-16.6	2280.2	22.80	330.70	41	105.8
288.56	2.89	41.85	-26	-14.8	2336.1	23.36	338.81	42	107.6
300.22	3.00	43.54	-25	-13	2393.2	23.93	347.09	43	109.4
312.24	3.12	45.28	-24	-11.2	2451.3	24.51	355.52	44	111.2
324.63	3.25	47.08	-23	-9.4	2510.4	25.10	364.09	45	113
337.39	3.37	48.93	-22	-7.6	2570.7	25.71	372.84	46	114.8
350.54	3.51	50.84	-21	-5.8	2632.1	26.32	381.74	47	116.6
364.08	3.64	52.80	-20	-4	2694.7	26.95	390.82	48	118.4
378.02	3.78	54.83	-19	-2.2	2758.3	27.58	400.04	49	120.2
392.37	3.92	56.91	-18	-0.4	2823.2	28.23	409.46	50	122
407.13	4.07	59.05	-17	1.4	2889.3	28.89	419.04	51	123.8

422.31	4.22	61.25	-16	3.2	2956.5	29.57	428.79	52	125.6
437.92	4.38	63.51	-15	5	3025	30.25	438.72	53	127.4
453.98	4.54	65.84	-14	6.8	3094.7	30.95	448.83	54	129.2
470.47	4.70	68.23	-13	8.6	3165.7	31.66	459.13	55	131
487.43	4.87	70.69	-12	10.4	3238.1	32.38	469.63	56	132.8
504.84	5.05	73.22	-11	12.2	3311.7	33.12	480.30	57	134.6
522.73	5.23	75.81	-10	14	3386.7	33.87	491.18	58	136.4
541.1	5.41	78.48	-9	15.8	3463	34.63	502.25	59	138.2
559.95	5.60	81.21	-8	17.6	3540.7	35.41	513.52	60	140
579.31	5.79	84.02	-7	19.4	3619.9	36.20	525.00	61	141.8
599.16	5.99	86.90	-6	21.2	3700.5	37.01	536.69	62	143.6
619.54	6.20	89.85	-5	23	3782.7	37.83	548.61	63	145.4
640.43	6.40	92.88	-4	24.8	3866.3	38.66	560.74	64	147.2
661.86	6.62	95.99	-3	26.6	3951.5	39.52	573.10	65	149
683.82	6.84	99.18	-2	28.4	4038.3	40.38	585.69	66	150.8
706.34	7.06	102.44	-1	30.2	4126.8	41.27	598.52	67	152.6
729.41	7.29	105.79	0	32	4217	42.17	611.60	68	154.4
753.06	7.53	109.22	1	33.8	4309	43.09	624.95	69	156.2
777.28	7.77	112.73	2	35.6	4402.9	44.03	638.56	70	158
802.08	8.02	116.33	3	37.4	4498.7	44.99	652.46	71	159.8
827.48	8.27	120.01	4	39.2	4596.5	45.97	666.64	72	161.6
853.49	8.53	123.78	5	41	4696.5	46.97	681.15	73	163.4
880.11	8.80	127.64	6	42.8	4798.9	47.99	696.00	74	165.2
907.35	9.07	131.60	7	44.6	4904.1	49.04	711.25	75	167