DSH Commercial

R32 Standard Efficiency Heat Pump
Direct-Drive Packaged Rooftop Unit
3-6 Ton DSH Light Commercial

3-5 TON - Up to 14 SEER2 / 12 EER2

6 TON - 16.7 IEER / 11.3 EER

5 YEAR PARTS LIMITED WARRANTY*

Intertek

AHRI CERTIFIED

ISO 9001 QUALITY MANAGEMENT SYSTEM GLOBAL QUALITY STANDARDS

ISO 14001 CERTIFIED ENVIRONMENTAL MANAGEMENT SYSTEM

R32

* Complete warranty details available from your local distributor or manufacturer's representative or at www.daikincomfort.com

Our Perfect Package:

Harnessing energy-efficient performance, proven technology, and enhanced comfort for life.

Since becoming the first company in Japan to manufacture packaged air conditioning systems, in 1951, Daikin has supported comfortable indoor living based on the strengths and technologies that have led to the growth of the company becoming one of the world's largest manufacturers of HVAC products, systems and refrigerants.

Today, as a comprehensive global manufacturer of HVAC products and systems, the Daikin brand is committed to being recognized as a truly global and excellent company capable of continually creating new value for its customers. The company plans to pursue sustainable growth and foster business operations that consistently harmonize with the goals of improving indoor comfort.

The group philosophy of the company includes:

- Creating new value continuously for customers
- Developing world leading energy-saving technology
- Being a flexible and dynamic organization
- Allowing employees to be the driving force for the success of the company
- Fostering an atmosphere of best practices, boldness, and innovation
- Thinking and acting globally

Contents

2	Introduction	2
4	Nomenclature	4
5	Features and Benefits	5
	Applications	8
	Serviceability	8
9	Product Specifications	9
	Coil Dimensions	13
	AHRI Ratings	13
	Sound Data	13
14	Dimensional Data	14
15	Expanding Cooling Data	15
25	Electric Heater Data	25
26	Air Flow	26
41	Static Pressure	41
42	Heating Data	42
43	Electrical Data	43
52	Wiring Diagrams	52
56	Electrical Connections	56
	Unit Clearances	56
57	Installation	57
	Weights	57

For details on accessories refer to document **PM-LC-ACCESSORIES**

Nomenclature

D	S	H	120	3	S	400	C	A	A	X	X	X	X	X	X	X	X	A	*
1	2	3	4,5,6	7	8	9,10,11	12	13	14	15	16	17	18	19	20	21	22	23	24

Revision Levels
Major & Minor

X No Options

ERW, PE Connection
X No Options
B Single-point power connection for Power Exhaust

IAQ
X No Options

Service Options
X No Option
A Powered convenience outlet
B Non-powered convenience outlet
C Hinge Panels
D Hinged Panels and Powered convenience outlet
E Hinged Panels and non-powered convenience outlet

Electrical
X No Options
A Non-Fused Disconnect
B Phase Monitor
C Thru-the-base connections
E Non-Fused Disconnect and Phase Monitor
F Non-Fused Disconnect and Thru-the-base connectons
H Phase Monitor and Thru-the-base connections
L Non-Fused Disconnect, Thru-the-base connectons and Phase Monitor

Economizer
X No Options
A Ultra Low-Leak Downflow Economizer w/ Enthalpy Sensor
C Low-Leak Downflow Economizer w/ Enthalpy Sensor
E Ultra Low-Leak Downflow Economizer for DDC controls w/ Enthalpy Sensor
F Low-Leak Internal Horizontal Economizer w/ Enthalpy Sensor
G Ultra Low-Leak Downflow Economizer w/ Dry Bulb Sensor
J Ultra Low-Leak Internal Horizontal Economizer w/ Dry Bulb Sensor
L Ultra Low-Leak Internal Horizontal Economizer w/ Dry Bulb Sensor
M Ultra Low-Leak Horizontal Economizer for DDC controls w/ Dry Bulb Sensor

Coils, Hail guard
X No Options
C Hail Guard

Sensors
D R32 Sensor
E RA Smoke Detector
F SA Smoke Detector
G RA & SA Smoke Detector

Brand
D Daikin

Configuration
S R32 Standard Efficiency
H R 32 High Efficiency

Application
C Cooling
G Gas/Electric
H Heat Pump

Nominal Cooling Capacity

036	3 Tons	090	7½ Tons	240	20 Tons
048	4 Tons	102	8½ Tons	300	25 Tons
060	5 Tons	120	10 Tons		
072	6 Tons	150	12½ tons		

Voltage

1	208-230/1/60	4	460/3/60
3	208-230/3/60	7	575/3/60

Supply Fan/Drive Type/Motor
D Direct Drive - Standard Static
L Direct Drive -Medium Static
W Direct Drive - High Static

Nominal Heating Capacity

Gas/Electric

045	45,000 BTU/h
060	60,000 BTU/h
070	70,000 BTU/h
080	80,000 BTU/h
090	90,000 BTU/h
100	100,000 BTU/h
115	115,000 BTU/h
125	125,000 BTU/h
130	130,000 BTU/h
140	140,000 BTU/h
150	150,000 BTU/h
180	180,000 BTU/h
210	210,000 BTU/h
225	225,000 BTU/h
240	240,000 BTU/h
260	260,000 BTU/h
350	350,000 BTU/h
360	360,000 BTU/h
400	400,000 BTU/h
480	480,000 BTU/h

A/C H/P Factory-Installed Electric Heat

XXX	No Heat
005	5kW
010	10 kW
015	15 kW
020	20 kW
030	30 kW
045	45kW
060	60kW
075	75kW

Electric Heat w/ SCR controls

S05	5kW	S22	20 kW
S10	10 kW	S25	25 kW
S15	15 kW	S30	30 kW
S16	15 kW	S31	30 kW
S18	18 kW	S45	45 kW
S20	20 kW	S46	45 kW
S21	20 kW	S60	60 kW
		S75	75kW

Refrigeration Systems
A Single stage cooling modes
C Two stage cooling modes
F Two stage cooling modes with Hot Gas Reheat and Low-ambient control
G Single stage cooling mode with Low-ambient controller
H Two stage cooling mode with Low-ambient controller

Heat Exchanger
X No options
A Standard Aluminized Exchanger
S Stainless Steel Exchanger
U Ultra Low No_X Stainless Steel Exchanger

Controls
A Electro-mechanical controls
B DDC w/ BACnet interface

HP Stocking Models

Daikin 3-6 Ton Direct Drive

Model Number	Code String	Model Number	Code String
DSH0361D000001S	DSH0361DXXXAXADXXXXXXXAA	DSH0603D000001S	DSH0603DXXXAXADXXXXXXXAA
DSH0363D000001S	DSH0363DXXXAXADXXXXXXXAA	DSH0604D000001S	DSH0604DXXXAXADXXXXXXXAA
DSH0364D000001S	DSH0364DXXXAXADXXXXXXXAA	DSH0607D000001S	DSH0607DXXXAXADXXXXXXXAA
DSH0367D000001S	DSH0367DXXXAXADXXXXXXXAA	DSH0723D000001S	DSH0723DXXXCXADXXXXXXXAA
DSH0481D000001S	DSH0481DXXXAXADXXXXXXXAA	DSH0724D000001S	DSH0724DXXXCXADXXXXXXXAA
DSH0483D000001S	DSH0483DXXXAXADXXXXXXXAA	DSH0727D000001S	DSH0727DXXXCXADXXXXXXXAA
DSH0484D000001S	DSH0484DXXXAXADXXXXXXXAA	DSH0723W000001F	DSH0723WXXXCXADXXXXXXXAA
DSH0487D000001S	DSH0487DXXXAXADXXXXXXXAA	DSH0724W000001F	DSH0724WXXXCXADXXXXXXXAA
DSH0601D000001S	DSH0601DXXXAXADXXXXXXXAA	DSH0727W000001F	DSH0727WXXXCXADXXXXXXXAA

Daikin Packaged Rooftop Units (RTUs) are built to perform, with features and options that help provide low installation and operation costs, superior indoor air quality, efficient operation, and longevity.

Installation

Daikin Packaged units are designed with fast and easy installation in mind and are ideal for both new construction and retrofit projects. Our packaged rooftop units are built to be a direct replacement for most rooftop units in the field without the need of a curb adapter, to be able to replace the unit in a shorter time and at a lower cost.

Cabinet Construction

Daikin packaged rooftop units are made with high quality galvanized steel with a powder-paint finish to provide higher corrosion resistance.

- Easy accessibility using our tool-less filter access.
- Unit is fully insulated to prevent sweating and thermal losses, using our foil face fiberglass insulation which also omits exposed filter fibers into the airstream.
- 1" Raised flanged edges around the supply and return offer easy installation for the duct connections.

- The full perimeter base rail is built using heavy gauge galvanized steel for a stronger structural installation, the base rails are a minimum of 3 ½" tall and include holes to allow for overhead rigging and lifting with forklifts.
- Electrical lines and can be brought through the base of the unit or through the horizontal knockout for easy installation and accessibility on the field.

Compressor

High performance, low noise scroll compressors to match the required total load.

- Resiliently factory-mounted on rubber grommets for vibration isolation
- Refrigeration circuit includes both high and low pressure safety switches.
- Unit is factory charged with environmentally friendly low GWP R32 refrigerant.
- Single stage scroll compressor 3-5 ton, 6 ton 2-stage scroll compressor.
- Compressor location outside the condenser section to avoid air bypass.
- Internal overload protection included with compressor.

Supply Fan

The direct-drive airfoil single width, single inlet (SWSI) Class II construction supply fan with aluminum fan blades provides efficient and quiet operation at wide ranging static pressure and air flow requirements.

- Direct-drive EEM motor removes the need for belts, sheaves, or bearings and its permanently lubricated to provide lower maintenance costs.
- Each fan assembly is dynamically trim balanced at the factory before shipment for quick start-up and efficient operation.
- Motor with thermal overload protection is provided for motor long lasting operation.

Coils

All units use large face area outdoor coils. These coils are constructed with seamless copper tubes, mechanically bonded into aluminum plate-type fins with full drawn collars to completely cover the tubes for high operating efficiencies.

The indoor coil section is installed in a draw through configuration to provide better dehumidification.

- Coils are factory pressure tested to ensure pressure and leak integrity.
- Copper tube / aluminum fin coils on condenser and evaporator

Heat Pump Heating

Evaporator coil, condenser coil, compressors and refrigerant circuit are designed for heat pump operation.

- The reversing valve switches position depending on cooling or heating demand
- The outdoor coil includes a thermal expansion valve to control the refrigerant flow during heat pump operation.
- Hybrid heating option is provided for auxiliary heating.

Controls and Wiring

Packaged rooftop units come equipped with a well-organized, large, easy to use weatherproof internal control box with easy access, for a better user experience.

- Units are factory-wired with color-coded wires and complete 24-volt Electromechanical controls package.
- Units include single-point power entry as standard
- Terminal strips are provided as standard for easy installation and field power wiring.

Filtration

Unit provides a draw-through filter section as standard for better air quality and long lasting component maintenance.

- Filters installed on the units are standard off the shelf sizes for easy replacement.
- Easy and fast filter service access.

Heating Section

Wide ranging of electric heat selections effectively handle most comfort heating demand from morning warm-up control to full heat.

Electric Heat

ETL approved electric heat is factory assembled, installed and tested.

- Heating control is fully integrated into the unit's control system for quick start-up and reliable control.
- Durable low watt density, nickel chromium elements provide longer life (compared to units without).
- Fuses are provided in each branch circuit to a maximum of 48 Amps per NEC requirements.
- Single-point power connection reduces installation cost.
- For operational safeties electric heat includes automatic reset, and high temperature limit safety protection.

Electrical

Units are completely wired and tested at the factory to provide faster commissioning and start-up.

- Wiring complies with NEC requirements and all applicable UL standards.
- Units are factory-wired with color-coded wires and complete 24-volt electromechanical controls package.
- A 115 V GFI convenience receptacle requiring independent power supply for the receptacle is optional.
- An optional unit powered 20 amp 115 V convenience receptacle, complete with factory mounted transformer, disconnect switch, and primary and secondary overload protection, eliminates the need to pull a separate 115 V power source.
- Supply air fan, compressor, and condenser fan motor branch circuits have individual short circuit protection. Unit includes knockouts in the bottom of the main control panels for field wiring entrance.
- A single-point power connection with power block is standard and a terminal board is provided for connecting low voltage control wiring.
- For better serviceability an optional non-fused disconnect switch can be installed inside the control panel and operated by an externally mounted handle to disconnect the electrical power at the unit.

DAIKIN

Applications

Daikin Rooftop units are intended for comfort cooling applications in normal heating, ventilating, and air conditioning. Consult your local Daikin sales representative for applications involving operations at high ambient temperatures, high altitudes, non-cataloged voltages, or for job-specific unit selections that fall outside of the range of the catalog tables.

For proper operation, units should be rigged in accordance with instructions stated on the installation manual. Fire dampers, if required, must be installed in the ductwork according to local and/or state codes. No space is allowed for these dampers in the unit.

Follow factory check, test and start procedures explicitly to achieve satisfactory start-up and operation.

Most rooftop applications take advantage of the significant energy savings provided with economizer operation. When an economizer system is used, mechanical refrigeration is typically not required below an ambient temperature of 50°F.

Serviceability

Daikin packaged rooftop units are built with serviceability in mind, designed to make future maintenance and service on the unit easy and accessible.

- Our packaged rooftop units offer a slide out blower to facilitate the access and removal of the fan.
- Filter panels on the small chassis line offer tool-less access for easy maintenance.
- Independent compressor outside of the air bypass to eliminate component blockage and provide easy access.
- Color coded and continuously wired to identify point-to-point component connections.
- All 3 - 6 ton units are designed for convertible airflow orientation to serve downflow or horizontal applications. Every unit ships prepared to convert to horizontal orientation in the field if required.

Model	DSH0361D000001S	DSH0363D000001S	DSH0364D000001S	DSH0367D000001S
COOLING CAPACITY				
Total BTU/H	35,000	35,000	35,000	35,000
SEER2 / EER2 (3-5T) or IEER / EER (6T)	14 / 12	14 / 12	14 / 12	14 / 12
AHRI Reference #	215414898	215439539	215439540	215439541
HEATING CAPACITY				
BTU/h (47° F)	33,600	33,600	33,600	33,600
HSPF2 (3-5T) or COP @47 / COP @ 17 (6T)	6.90	6.90	6.90	6.90
EVAPORATOR MOTOR / RTPF (ROUND TUBE PLATE FIN)				
Motor Type	Direct Drive	Direct Drive	Direct Drive	Direct Drive
External Static Pressure (ESP)	Standard	Standard	Standard	Standard
Wheel Dia. X Width	12 X 11	12 X 11	12 X 11	12 X 11
Indoor Nominal CFM	1220	1220	1220	1220
RPM	1200 MAX	1200 MAX	1500 MAX	1500 MAX
Indoor Horsepower	0.75	0.75	1.20	1.20
Filter Size (in)	14 X 20 X 2 (4)	14 X 20 X 2 (4)	14 X 20 X 2 (4)	14 X 20 X 2 (4)
Drain Size (NPT)	3/4	3/4	3/4	3/4
R-32 Refrigerant Charge (oz.)	140	140	140	140
Evaporator Coil Face Area (ft^2)	7.33	7.33	7.33	7.33
Rows Deep/ Fins per Inch	3 / 16	3 / 16	3 / 16	3 / 16
CONDENSER FAN / RTPF (ROUND TUBE PLATE FIN)				
Quantity of Condenser Fan Motors	1	1	1	1
RPM (High/Low stage)	810	810	810	810
Outdoor Horsepower	1/6	1/6	1/6	1/6
Fan Diameter/ # Fan Blades	22 / 3	22 / 3	22 / 3	22 / 3
Face Area (ft^2)	12.67	12.67	12.67	12.67
Rows Deep / Fins per Inch	2 / 16	2 / 16	2 / 16	2 / 16
COMPRESSOR				
Quantity / Type / Stages	1 / Scroll / 1	1 / Scroll / 1	1 / Scroll / 1	1 / Scroll / 1
Compressor RLA / LRA	16.4 / 88	10.6 / 97.5	4.9 / 44.3	3.8 / 27.1
ELECTRICAL DATA				
Voltage-Phase-Frequency	208/230-1-60	208/230-3-60	460-3-60	575-3-60
Indoor Blower FLA	5.7	5.7	2.5	2
Max External Static (In. W.C.)	0.8	0.8	0.8	0.8
Outdoor Fan FLA	0.95	0.95	0.48	0.39
Min. Circuit Ampacity[1]	27.2/27.2	19.9/19.9	9.1	7.2
Max. Overcurrent Protection (A)[2]	40/40	30/30	15	15
Power Supply Conduit Hole Dia. (in)	1.125	1.125	1.125	1.125
Low-Voltage Conduit Hole Dia. (in)	0.5	0.5	0.5	0.5
OPERATING WEIGHT (LBS.)				
Operating Weight (lbs)	536	535	543	543
SHIPPING WEIGHT (LBS.)				
Ship Weight (lbs)	606	605	613	613

[1] Wire size should be determined in accordance with National Electrical Codes. Extensive wire runs will require larger wire sizes.
[2] May use fuses or HACR-type circuit breakers of the same size as noted.
Note: Always check the S&R plate for electrical data on the unit being installed.

Model	DSH0481D000001S	DSH0483D000001S	DSH0484D000001S	DSH0487D000001S
COOLING CAPACITY				
Total BTU/H	46,000	46,000	46,000	46,000
SEER2 / EER2 (3-5T) or IEER / EER (6T)	13.7 / 11.8	13.7 / 11.8	13.7 / 11.8	13.7 / 11.8
AHRI Reference #	215414899	215414900	215414901	215414902
HEATING CAPACITY				
BTU/h (47° F)	45,000	45,000	45,000	45,000
HSPF2 (3-5T) or COP @47 / COP @ 17 (6T)	6.90	6.90	6.90	6.90
EVAPORATOR MOTOR / RTPF (ROUND TUBE PLATE FIN)				
Motor Type	Direct Drive	Direct Drive	Direct Drive	Direct Drive
External Static Pressure (ESP)	Standard	Standard	Standard	Standard
Wheel Dia. X Width	12 X 11	12 X 11	12 X 11	12 X 11
Indoor Nominal CFM	1580	1580	1580	1580
RPM	1200 MAX	1200 MAX	1500 MAX	1500 MAX
Indoor Horsepower	1.00	1.00	1.20	1.20
Filter Size (in)	14 X 20 X 2 (4)	14 X 20 X 2 (4)	14 X 20 X 2 (4)	14 X 20 X 2 (4)
Drain Size (NPT)	3/4	3/4	3/4	3/4
R-32 Refrigerant Charge (oz.)	168	168	168	168
Evaporator Coil Face Area (ft^2)	7.33	7.33	7.33	7.33
Rows Deep/ Fins per Inch	4 / 16	4 / 16	4 / 16	4 / 16
CONDENSER FAN / RTPF (ROUND TUBE PLATE FIN)				
Quantity of Condenser Fan Motors	1	1	1	1
RPM (High/Low stage)	1075	1075	1075	1075
Outdoor Horsepower	1/4	1/4	1/4	1/4
Fan Diameter/ # Fan Blades	22 / 4	22 / 4	22 / 4	22 / 4
Face Area (ft^2)	17.28	17.28	17.28	17.28
Rows Deep / Fins per Inch	2 / 16	2 / 16	2 / 16	2 / 16
COMPRESSOR				
Quantity / Type / Stages	1 / Scroll / 1	1 / Scroll / 1	1 / Scroll / 1	1 / Scroll / 1
Compressor RLA / LRA	19.4 / 128	12.2 / 120	5.8 / 55.1	5.8 / 41.0
ELECTRICAL DATA				
Voltage-Phase-Frequency	208/230-1-60	208/230-3-60	460-3-60	575-3-60
Indoor Blower FLA	6.9	6.9	2.5	2
Max External Static (In. W.C.)	0.8	0.8	0.8	0.8
Outdoor Fan FLA	1.4	1.4	0.7	0.55
Min. Circuit Ampacity[1]	32.5 / 32.5	23.5 / 23.5	10.4	9.8
Max. Overcurrent Protection (A)[2]	50/50	35/35	15	15
Power Supply Conduit Hole Dia. (in)	1.125	1.125	1.125	1.125
Low-Voltage Conduit Hole Dia. (in)	0.5	0.5	0.5	0.5
OPERATING WEIGHT (LBS.)				
Operating Weight (lbs)	587	582	586	586
SHIPPING WEIGHT (LBS.)				
Ship Weight (lbs)	657	652	656	656

[1] Wire size should be determined in accordance with National Electrical Codes. Extensive wire runs will require larger wire sizes.
[2] May use fuses or HACR-type circuit breakers of the same size as noted.
Note: Always check the S&R plate for electrical data on the unit being installed.

Model	DSH0601D000001S	DSH0603D000001S	DSH0604D000001S	DSH0607D000001S
COOLING CAPACITY				
Total BTU/H	57,500	57,500	57,500	57,500
SEER2 / EER2 (3-5T) or IEER / EER (6T)	13.7 / 11.8	13.7 / 11.8	13.7 / 11.8	13.7 / 11.8
AHRI Reference #	215414903	215414904	215414905	215414906
HEATING CAPACITY				
BTU/h (47° F)	55,000	55,000	55,000	55,000
HSPF2 (3-5T) or COP @47 / COP @ 17 (6T)	6.90	6.90	6.90	6.90
EVAPORATOR MOTOR / RTPF (ROUND TUBE PLATE FIN)				
Motor Type	Direct Drive	Direct Drive	Direct Drive	Direct Drive
External Static Pressure (ESP)	Standard	Standard	Standard	Standard
Wheel Dia. X Width	12 X 11	12 X 11	12 X 11	12 X 11
Indoor Nominal CFM	1870	1870	1870	1870
RPM	1200 MAX	1200 MAX	1500 MAX	1500 MAX
Indoor Horsepower	1.00	1.00	1.20	1.20
Filter Size (in)	14 X 20 X 2 (4)	14 X 20 X 2 (4)	14 X 20 X 2 (4)	14 X 20 X 2 (4)
Drain Size (NPT)	3/4	3/4	3/4	3/4
R-32 Refrigerant Charge (oz.)	163	163	163	163
Evaporator Coil Face Area (ft^2)	7.33	7.33	7.33	7.33
Rows Deep/ Fins per Inch	4 / 16	4 / 16	4 / 16	4 / 16
CONDENSER FAN / RTPF (ROUND TUBE PLATE FIN)				
Quantity of Condenser Fan Motors	1	1	1	1
RPM (High/Low stage)	1122	1122	1050	1050
Outdoor Horsepower	1/3	1/3	1/3	1/3
Fan Diameter/ # Fan Blades	22 / 4	22 / 4	22 / 4	22 / 4
Face Area (ft^2)	17.28	17.28	17.28	17.28
Rows Deep / Fins per Inch	2 / 20	2 / 20	2 / 20	2 / 20
COMPRESSOR				
Quantity / Type / Stages	1 / Scroll / 1	1 / Scroll / 1	1 / Scroll / 1	1 / Scroll / 1
Compressor RLA / LRA	24.0 / 156	17.3 / 155	7.7 / 58.1	7.0 / 47.8
ELECTRICAL DATA				
Voltage-Phase-Frequency	208/230-1-60	208/230-3-60	460-3-60	575-3-60
Indoor Blower FLA	6.9	6.9	2.5	2
Max External Static (In. W.C.)	0.8	0.8	0.8	0.8
Outdoor Fan FLA	2	2	0.85	0.67
Min. Circuit Ampacity[1]	38.9 / 38.9	30.5 / 30.5	13.0	11.5
Max. Overcurrent Protection (A)[2]	60/60	45/45	20	15
Power Supply Conduit Hole Dia. (in)	1.125	1.125	1.125	1.125
Low-Voltage Conduit Hole Dia. (in)	0.5	0.5	0.5	0.5
OPERATING WEIGHT (LBS.)				
Operating Weight (lbs)	600	596	600	600
SHIPPING WEIGHT (LBS.)				
Ship Weight (lbs)	670	666	670	670

[1] Wire size should be determined in accordance with National Electrical Codes. Extensive wire runs will require larger wire sizes.
[2] May use fuses or HACR-type circuit breakers of the same size as noted.
Note: Always check the S&R plate for electrical data on the unit being installed.

Model	DSH0723D000001S	DSH0724D000001S	DSH0727D000001S	DSH0723W000001F	DSH0724W000001F	DSH0727W000001F
COOLING CAPACITY						
Total BTU/H	68,000	68,000	68,000	68,000	68,000	68,000
SEER2 / EER2 (3-5T) or IEER / EER (6T)	16.7 / 11.3	16.7 / 11.3	16.7 / 11.3	16.7 / 11.3	16.7 / 11.3	16.7 / 11.3
AHRI Reference #	215415683	215415684	215415685	215415683	215415684	215415685
HEATING CAPACITY						
BTU/h (47° F)	67,000	67,000	67,000	67,000	67,000	67,000
HSPF2 (3-5T) or COP @47 / COP @ 17 (6T)	3.40 / 2.25	3.40 / 2.25	3.40 / 2.25	3.40 / 2.25	3.40 / 2.25	3.40 / 2.25
EVAPORATOR MOTOR / RTPF (ROUND TUBE PLATE FIN)						
Motor Type	Direct Drive	Direct Drive	Direct Drive	Direct Drive	Direct Drive	Direct Drive
External Static Pressure (ESP)	Standard	Standard	Standard	High	High	High
Wheel Dia. X Width	12 X 11	12 X 11	12 X 11	12 X 11	12 X 11	12 X 11
Indoor Nominal CFM	2380	2380	2380	2380	2380	2380
RPM	1500 MAX	1500 MAX	1500 MAX	1500 MAX	1500 MAX	1500 MAX
Indoor Horsepower	1.20	1.20	1.20	2.30	2.30	2.30
Filter Size (in)	14 X 20 X 2 (2) 20 X 20 X 2 (2)	14 X 20 X 2 (2) 20 X 20 X 2 (2)	14 X 20 X 2 (2) 20 X 20 X 2 (2)	14 X 20 X 2 (2) 20 X 20 X 2 (2)	14 X 20 X 2 (2) 20 X 20 X 2 (2)	14 X 20 X 2 (2) 20 X 20 X 2 (2)
Drain Size (NPT)	3/4	3/4	3/4	3/4	3/4	3/4
R-32 Refrigerant Charge (oz.)	182	182	182	182	182	182
Evaporator Coil Face Area (ft^2)	9.16	9.16	9.16	9.16	9.16	9.16
Rows Deep/ Fins per Inch	4 / 16	4 / 16	4 / 16	4 / 16	4 / 16	4 / 16
CONDENSER FAN / RTPF (ROUND TUBE PLATE FIN)						
Quantity of Condenser Fan Motors	1	1	1	1	1	1
RPM (High/Low stage)	1130	1115	1075	1130	1115	1075
Outdoor Horsepower	0.50	0.50	0.50	0.50	0.50	0.50
Fan Diameter/ # Fan Blades	22 / 3	22 / 3	22 / 3	22 / 3	22 / 3	22 / 3
Face Area (ft^2)	19.01	19.01	19.01	19.01	19.01	19.01
Rows Deep / Fins per Inch	2 / 20	2 / 20	2 / 20	2 / 20	2 / 20	2 / 20
COMPRESSOR						
Quantity / Type / Stages	1 / Scroll / 2	1 / Scroll / 2	1 / Scroll / 2	1 / Scroll / 2	1 / Scroll / 2	1 / Scroll / 2
Compressor RLA / LRA	16.1 / 155	7.0 / 70.8	6.0 / 58.2	16.1 / 155	7.0 / 70.8	6.0 / 58.2
ELECTRICAL DATA						
Voltage-Phase-Frequency	208/230-3-60	460-3-60	575-3-60	208/230-3-60	460-3-60	575-3-60
Indoor Blower FLA	5	2.5	2	7.7	4.5	3.8
Max External Static (In. W.C.)	0.8	0.8	0.8	1.6	1.6	1.6
Outdoor Fan FLA	2.7	1.4	1	2.7	1.4	1
Min. Circuit Ampacity[1]	27.9/27.9	12.7	10.5	30.6 / 30.6	14.7	12.3
Max. Overcurrent Protection (A)[2]	40/40	15	15	45/45	20	15
Power Supply Conduit Hole Dia. (in)	1.125	1.125	1.125	1.125	1.125	1.125
Low-Voltage Conduit Hole Dia. (in)	0.5	0.5	0.5	0.5	0.5	0.5
OPERATING WEIGHT (LBS.)						
Operating Weight (lbs)	645	645	645	649	649	649
SHIPPING WEIGHT (LBS.)						
Ship Weight (lbs)	715	715	715	719	719	719

[1] Wire size should be determined in accordance with National Electrical Codes. Extensive wire runs will require larger wire sizes.
[2] May use fuses or HACR-type circuit breakers of the same size as noted.
Note: Always check the S&R plate for electrical data on the unit being installed.

Coil Dimensions

	Indoor				Outdoor				
Tons	Length	Height	Width	FPI	Length (R1)	Length (R2)	Height	Width	FPI
DSH036	38.068	27.712	2.250	16	53.525	51.823	34.640	1.500	16
DSH048	38.068	27.712	3.000	16	73.025	70.669	34.640	1.500	16
DSH060	38.068	27.712	3.000	16	73.025	70.669	34.640	1.500	20
DSH072	38.068	34.640	3.000	16	73.025	70.669	38.104	1.500	20

Sound Data

Static Pressure	3 Ton Sound (dB) at 60 Hz										
	Indoor CFM	Componet	A-Weighted	63	125	250	500	1000	2000	4000	8000
0.8	1,160	Discharge	67	83.1	78.4	65.6	60.2	58.3	55.4	54.8	48.2
		Inlet	62	82.4	75.9	59.4	54.9	52.3	47.3	45.7	40.8
1.8		Discharge	77	87.3	86.5	76.4	71.3	70.6	65.1	65.5	62.1
		Inlet	69	83.7	81.6	69.5	64.5	62.0	57.6	57.8	55.8
N/A	N/A	Outdoor	75	-	77.9	74.2	72.1	70.3	65.2	59.1	52.9

Static Pressure	4 Ton Sound (dB) at 60 Hz										
	Indoor CFM	Componet	A-Weighted	63	125	250	500	1000	2000	4000	8000
0.8	1,570	Discharge	73	98.0	85.8	70.3	64.4	62.4	58.0	57.8	52.5
		Inlet	70	90.2	82.4	67.8	60.7	56.9	51.3	49.7	45.8
1.8		Discharge	77	97.9	84.5	76.6	72.1	69.0	65.3	65.6	61.8
		Inlet	70	89.1	80.2	71.5	64.5	62.2	57.7	57.7	54.8
N/A	N/A	Outdoor	77	-	77.9	76.7	72.4	72.5	70.3	63.9	57.5

Static Pressure	5 Ton Sound (dB) at 60 Hz										
	Indoor CFM	Componet	A-Weighted	63	125	250	500	1000	2000	4000	8000
0.8	1,820	Discharge	75	98.4	83.2	76.1	69.8	67.2	63.2	63.4	59.4
		Inlet	68	84.1	78.6	74.1	62.2	60.0	55.2	55.2	51.9
1.8		Discharge	80	92.8	87.1	81.9	76.0	72.4	68.2	68.2	65.6
		Inlet	73	87.9	83.9	73.3	67.3	64.8	61.2	60.8	58.0
N/A	N/A	Outdoor	79	-	78.2	76.9	75.3	73.8	71.7	67.4	59.4

Static Pressure	6 Ton Sound (dB) at 60 Hz										
	Indoor CFM	Componet	A-Weighted	63	125	250	500	1000	2000	4000	8000
0.8	2,100	Discharge	64	82.1	74.4	63.4	60.3	55.7	53.4	52.6	47.4
		Inlet	60	75.7	72.8	59.6	56.5	53.5	49.6	43.6	40.5
1.8		Discharge	76	92.9	86.7	76.9	70.7	67.0	63.5	63.8	59.7
		Inlet	70	85.5	83.4	69.5	63.8	61.6	56.0	55.0	52.1
N/A	N/A	Outdoor	82	-	83.4	83.2	80.2	77.4	72.5	67.0	61.8

[1] Outdoor sound data is measured in accordance with AHRI standard 230

[2] Discharge and Inlet sound data was measured in accordanced with AHRI standard 260.

[3] Measurements are expressed in terms of sound power. Do not compare these values to sound pressure values because sound pressure depends on specific environment factors which normally do not match individual applications. Sound power values are independent of the environment and therefore more accurate.

[4] A-weighted sound ratings filter out high and very low frequencies, to better approximate the response of "average" human ear. A-weighted measurements for Daikin units are taken in accordance with AHRI standards 230 and 260.

AHRI Ratings

MODEL	COOLING CAPACITY	EER2 (3-5T) EER (6T)	SEER2 (3-5T) IEER (6T)	HEATING CAPACITY	HSPF2 (3-5T)	COP @47 (6T)	COP @17 (6T)
DSH036	35,000	12.00	14.00	33,600	6.90	-	-
DSH048	46,000	11.80	13.70	45,000	6.90	-	-
DSH060	57,500	11.80	13.70	55,000	6.90	-	-
DSH072	68,000	11.30	16.70	67,000		3.40	2.25

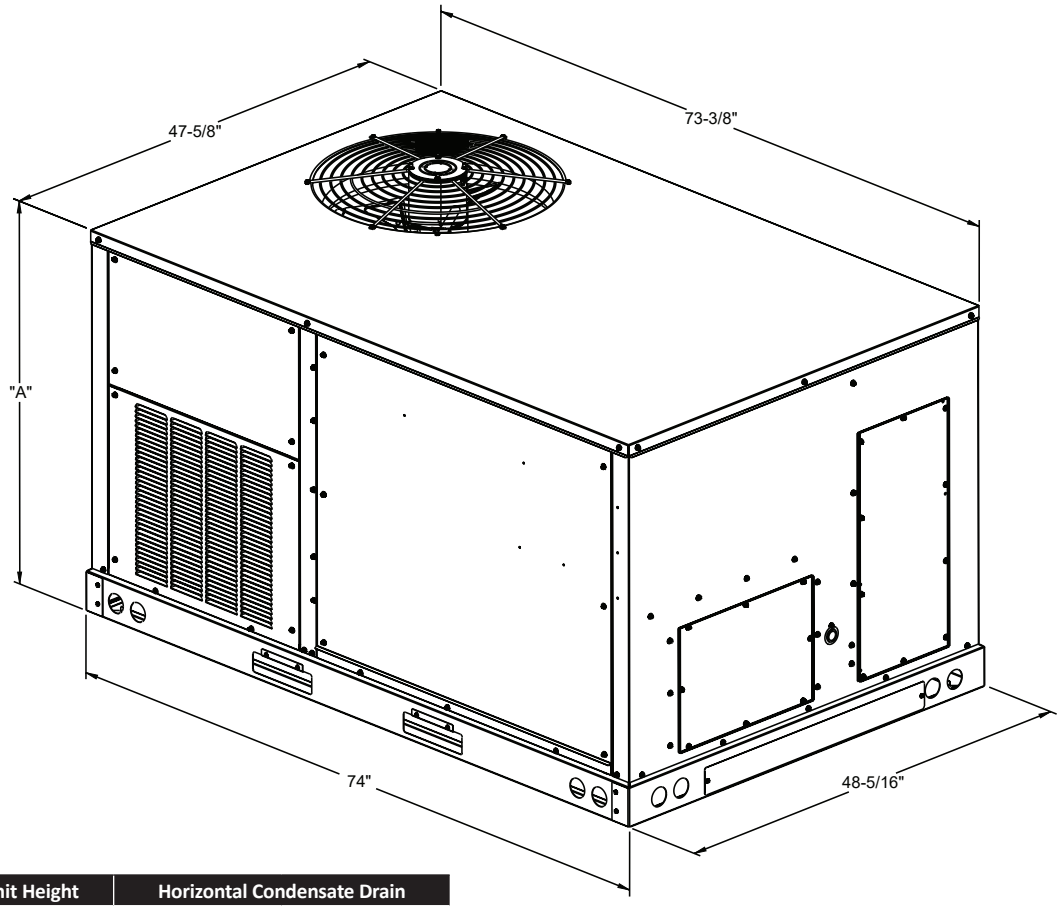

TONNAGE	Unit Height	Horizontal Condensate Drain	
	Dim "A" (Below)	Dim "C" (Below)	Dim "C" (Below)
	DSH	DSH	DSH
3 ton	39⅞"	20"	11½"
4 ton			
5 ton			
6 ton	43½"	20"	8⅛"

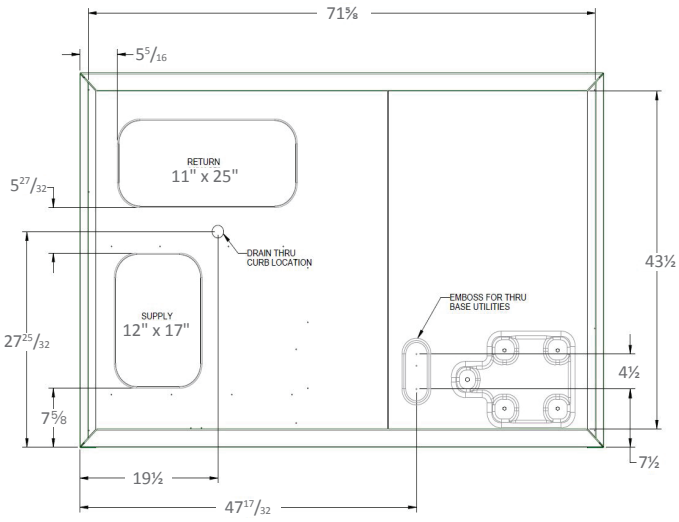

BOTTOM VIEW

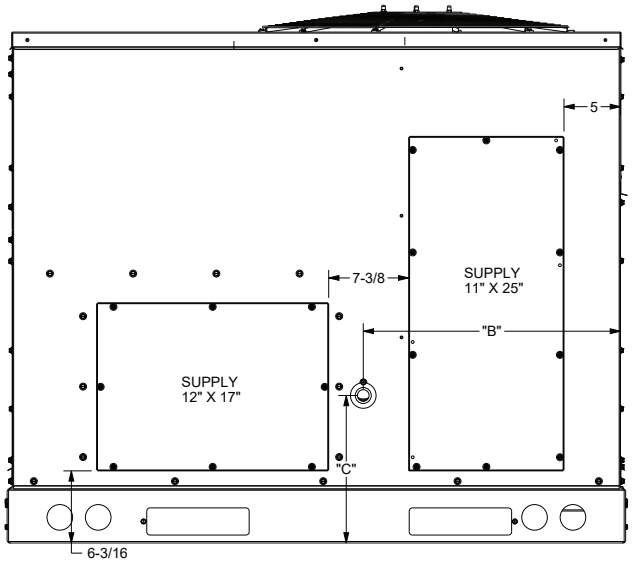

HORIZONTAL DISCHARGE

			Outdoor Ambient Temperature																							
			65				75				85				95				105				115			
			Entering Indoor Wet Bulb Temperature																							
IDB	Airflow	ID WB	59	63	67	71	59	63	67	71	59	63	67	71	59	63	67	71	59	63	67	71	59	63	67	71
70	900	MBh	35.0	35.5	36.6	-	34.7	35.2	36.3	-	33.8	34.3	35.3	-	32.2	32.7	33.7	-	30.2	30.7	31.8	-	28.4	28.9	30.0	-
		S/T	0.57	0.51	0.41	-	0.57	0.52	0.41	-	0.59	0.54	0.43	-	0.62	0.55	0.44	-	0.65	0.58	0.46	-	0.73	0.66	0.53	-
		ΔT	20.08	18.36	15.15	-	20.04	18.31	15.10	-	20.28	18.56	15.34	-	20.02	18.30	15.08	-	19.79	18.07	14.85	-	20.87	19.15	15.93	-
		kW	1.99	1.99	1.99	-	2.24	2.24	2.23	-	2.52	2.51	2.51	-	2.81	2.81	2.81	-	3.15	3.15	3.14	-	3.54	3.54	3.53	-
		Amps	7.39	7.38	7.36	-	8.46	8.45	8.43	-	9.66	9.65	9.64	-	10.96	10.95	10.94	-	12.41	12.41	12.39	-	14.12	14.11	14.09	-
		Hi PR	259	261	262	-	301	302	304	-	344	345	347	-	391	392	394	-	441	442	444	-	495	496	498	-
		Lo PR	121	123	126	-	129	130	133	-	135	137	140	-	141	142	145	-	144	148	151	-	140	145	154	-
	1220	MBh	35.9	36.4	37.5	-	35.6	36.1	37.2	-	34.7	35.2	36.2	-	33.1	33.6	34.6	-	31.1	31.6	32.7	-	29.3	29.8	30.9	-
		S/T	0.66	0.58	0.45	-	0.66	0.59	0.45	-	0.69	0.61	0.48	-	0.71	0.63	0.49	-	0.75	0.66	0.51	-	0.84	0.75	0.58	-
		ΔT	17.58	15.86	12.65	-	17.54	15.81	12.60	-	17.78	16.06	12.84	-	17.52	15.80	12.58	-	17.29	15.57	12.35	-	18.37	16.64	13.43	-
		kW	2.02	2.02	2.02	-	2.27	2.27	2.26	-	2.55	2.54	2.54	-	2.85	2.84	2.84	-	3.18	3.18	3.17	-	3.57	3.57	3.57	-
		Amps	7.52	7.51	7.49	-	8.60	8.59	8.57	-	9.80	9.79	9.77	-	11.10	11.09	11.07	-	12.55	12.54	12.52	-	14.25	14.24	14.23	-
		Hi PR	264	266	267	-	306	307	309	-	349	350	352	-	396	397	399	-	446	447	449	-	500	501	503	-
		Lo PR	125	126	129	-	132	134	137	-	139	140	144	-	144	146	149	-	150	151	154	-	146	152	160	-
	1350	MBh	36.4	36.9	38.0	-	36.1	36.6	37.6	-	35.1	35.6	36.7	-	33.5	34.0	35.1	-	31.6	32.1	33.1	-	29.8	30.3	31.4	-
		S/T	0.69	0.61	0.47	-	0.69	0.61	0.47	-	0.72	0.64	0.49	-	0.74	0.66	0.50	-	0.78	0.69	0.52	-	0.88	0.78	0.60	-
		ΔT	16.83	15.11	11.89	-	16.78	15.06	11.84	-	17.02	15.30	12.09	-	16.76	15.04	11.83	-	16.53	14.81	11.60	-	17.61	15.89	12.67	-
		kW	2.03	2.03	2.03	-	2.28	2.28	2.27	-	2.56	2.55	2.55	-	2.85	2.85	2.85	-	3.19	3.19	3.18	-	3.58	3.58	3.57	-
		Amps	7.56	7.55	7.53	-	8.64	8.63	8.61	-	9.84	9.83	9.81	-	11.14	11.13	11.11	-	12.59	12.58	12.56	-	14.29	14.28	14.27	-
		Hi PR	266	267	269	-	308	309	311	-	351	352	354	-	398	399	401	-	448	449	451	-	502	503	505	-
		Lo PR	127	128	131	-	134	136	139	-	141	142	145	-	146	148	151	-	150	153	156	-	149	153	163	-
75	900	MBh	35.2	35.7	36.8	38.4	34.9	35.4	36.4	38.1	33.9	34.5	35.5	37.1	32.3	32.9	33.9	35.5	30.4	30.9	32.0	33.6	28.6	29.1	30.2	31.8
		S/T	0.67	0.61	0.51	0.4	0.68	0.62	0.51	0.4	0.70	0.64	0.53	0.4	0.73	0.67	0.55	0.4	0.77	0.70	0.58	0.5	0.85	0.78	0.65	0.5
		ΔT	23.87	22.15	18.93	15.6	23.83	22.10	18.89	15.6	24.07	22.35	19.13	15.8	23.81	22.09	18.87	15.5	23.58	21.86	18.64	15.3	24.66	22.93	19.72	16.4
		kW	1.99	1.99	1.98	2.0	2.24	2.24	2.23	2.3	2.51	2.51	2.51	2.5	2.81	2.81	2.81	2.8	3.15	3.14	3.14	3.2	3.54	3.54	3.53	3.6
		Amps	7.38	7.37	7.35	7.4	8.45	8.45	8.43	8.5	9.65	9.65	9.63	9.7	10.95	10.95	10.93	11.0	12.41	12.40	12.38	12.5	14.11	14.10	14.08	14.2
		Hi PR	260	261	263	267.2	301	302	304	308.6	344	346	347	352.0	391	392	394	398.6	441	443	444	449.0	495	496	498	502.7
		Lo PR	121	123	126	131.1	129	130	133	138.5	135	137	140	145.1	139	142	145	150.6	140	148	151	156.1	139	148	156	162.9
	1220	MBh	36.1	36.6	37.7	39.3	35.8	36.3	37.3	39.0	34.8	35.4	36.4	38.0	33.2	**33.8**	34.8	36.4	31.3	31.8	32.9	34.5	29.5	30.0	31.1	32.7
		S/T	0.79	0.72	0.59	0.4	0.80	0.73	0.59	0.4	0.83	0.75	0.61	0.5	0.86	**0.78**	0.63	0.5	0.90	0.82	0.66	0.5	1.00	0.91	0.74	0.6
		ΔT	21.37	19.65	16.43	13.1	21.33	19.60	16.39	13.1	21.57	19.84	16.63	13.3	21.31	**19.58**	16.37	13.0	21.08	19.35	16.14	12.8	21.99	20.43	17.22	13.9
		kW	2.02	2.02	2.02	2.0	2.27	2.27	2.26	2.3	2.54	2.54	2.54	2.6	2.84	**2.84**	2.84	2.9	3.18	3.18	3.17	3.2	3.57	3.57	3.56	3.6
		Amps	7.51	7.50	7.49	7.6	8.59	8.58	8.56	8.6	9.79	9.78	9.76	9.8	11.09	**11.08**	11.06	11.1	12.54	12.53	12.51	12.6	14.24	14.23	14.22	14.3
		Hi PR	265	266	268	272.2	306	307	309	313.6	349	351	352	356.9	396	**397**	399	403.6	446	448	449	453.9	500	501	503	507.6
		Lo PR	125	126	130	134.8	132	134	137	142.3	139	140	144	148.8	139	**146**	149	154.4	140	151	155	159.8	139	154	161	166.6
	1350	MBh	36.6	37.1	38.1	39.8	36.3	36.8	37.8	39.4	35.3	35.8	36.9	38.5	33.7	34.2	35.3	36.9	31.8	32.3	33.3	35.0	30.0	30.5	31.5	33.2
		S/T	0.84	0.76	0.61	0.5	0.84	0.76	0.61	0.5	0.88	0.79	0.64	0.5	0.91	0.82	0.66	0.5	0.95	0.86	0.69	0.5	1.00	0.96	0.77	0.6
		ΔT	20.62	18.90	15.68	12.3	20.57	18.85	15.63	12.3	20.81	19.09	15.87	12.5	20.55	18.83	15.61	12.3	20.32	18.60	15.38	12.1	20.19	19.68	16.46	13.1
		kW	2.03	2.03	2.02	2.0	2.28	2.28	2.27	2.3	2.55	2.55	2.55	2.6	2.85	2.85	2.85	2.9	3.19	3.18	3.18	3.2	3.58	3.58	3.57	3.6
		Amps	7.55	7.54	7.53	7.6	8.63	8.62	8.60	8.7	9.83	9.82	9.80	9.9	11.13	11.12	11.10	11.2	12.58	12.57	12.55	12.6	14.28	14.27	14.26	14.3
		Hi PR	267	268	269	274.1	308	309	311	315.4	351	352	354	358.8	398	399	401	405.4	448	449	451	455.8	502	503	505	509.5
		Lo PR	127	128	131	136.5	134	136	139	143.9	139	142	145	150.5	140	148	151	156.0	139	153	156	161.5	156	157	163	168.3

IDB: Entering Indoor Dry Bulb Temperature

Shaded area reflects AHRI (TVA) conditions

W = Total system power

High and low pressures are measured at the liquid and suction access fittings.

Amps: Unit amps (comp.+ evaporator + condenser fan motors)

Design Subcooling, 16 - 19 °F @ the liquid access fitting connection ARI 95 test conditions. Design Superheat 8 - 12°F @ the compressor suction access fitting connection.

			Outdoor Ambient Temperature																							
			65				75				85				95				105				115			
			Entering Indoor Wet Bulb Temperature																							
IDB	Airflow	ID WB	59	63	67	71	59	63	67	71	59	63	67	71	59	63	67	71	59	63	67	71	59	63	67	71
80	900	MBh	35.4	35.9	36.9	38.6	35.1	35.6	36.6	38.3	34.1	34.6	35.7	37.3	32.5	33.0	34.1	35.7	30.6	31.1	32.1	33.8	28.8	29.3	30.4	32.0
		S/T	0.77	0.72	0.61	0.5	0.78	0.72	0.61	0.5	0.81	0.75	0.64	0.5	0.84	0.78	0.66	0.5	0.89	0.82	0.69	0.6	0.98	0.90	0.77	0.6
		ΔT	27.69	25.96	22.75	19.4	27.64	25.92	22.70	19.4	27.88	26.16	22.94	19.6	27.62	25.90	22.68	19.4	27.39	25.67	22.45	19.1	28.47	26.75	23.53	20.2
		kW	1.99	1.99	1.99	2.0	2.24	2.24	2.23	2.3	2.52	2.51	2.51	2.5	2.81	2.81	2.81	2.8	3.15	3.15	3.14	3.2	3.54	3.54	3.53	3.6
		Amps	7.38	7.38	7.36	7.4	8.46	8.45	8.43	8.5	9.66	9.65	9.63	9.7	10.96	10.95	10.93	11.0	12.41	12.40	12.38	12.5	14.11	14.11	14.09	14.2
		Hi PR	260	261	263	267.7	302	303	305	309.1	345	346	348	352.4	392	393	395	399.1	442	443	445	449.4	496	497	499	503.1
		Lo PR	122	123	126	131.6	128	131	134	139.1	128	137	140	145.6	127	143	146	151.2	127	148	151	156.6	128	151	158	163.4
	1220	MBh	36.3	36.8	37.8	39.5	36.0	36.5	37.5	39.2	35.0	35.5	36.6	38.2	33.4	33.9	**35.0**	36.6	31.5	32.0	33.0	34.7	29.7	30.2	31.3	32.9
		S/T	0.93	0.86	0.72	0.6	0.94	0.86	0.72	0.6	0.97	0.89	0.75	0.6	1.00	0.93	**0.77**	0.6	1.00	0.97	0.81	0.6	1.00	1.00	0.90	0.7
		ΔT	25.19	23.46	20.25	16.9	25.14	23.42	20.20	16.9	25.38	23.66	20.44	17.1	24.91	23.40	**20.18**	16.8	23.46	23.17	19.95	16.6	22.13	22.50	21.03	17.7
		kW	2.02	2.02	2.02	2.0	2.27	2.27	2.26	2.3	2.55	2.54	2.54	2.6	2.84	2.84	**2.84**	2.9	3.18	3.18	3.17	3.2	3.57	3.57	3.56	3.6
		Amps	7.52	7.51	7.49	7.6	8.59	8.59	8.57	8.6	9.79	9.79	9.77	9.8	11.09	11.08	**11.07**	11.1	12.55	12.54	12.52	12.6	14.25	14.24	14.22	14.3
		Hi PR	265	266	268	272.7	307	308	310	314.1	350	351	353	357.4	397	398	**400**	404.1	447	448	450	454.4	501	502	504	508.1
		Lo PR	125	127	130	135.3	128	134	138	142.8	128	141	144	149.4	145	147	**150**	154.9	127	152	155	160.3	157	152	162	167.1
	1350	MBh	36.8	37.3	38.3	39.9	36.4	36.9	38.0	39.6	35.5	36.0	37.1	38.7	33.9	34.4	35.5	37.1	32.0	32.5	33.5	35.1	30.2	30.7	31.7	33.4
		S/T	0.99	0.91	0.76	0.6	0.99	0.91	0.76	0.6	1.00	0.94	0.79	0.6	1.00	0.98	0.81	0.6	1.00	1.00	0.85	0.7	1.00	1.00	0.95	0.8
		ΔT	24.43	22.71	19.49	16.2	24.38	22.66	19.45	16.1	23.91	22.90	19.69	16.4	22.83	22.64	19.43	16.1	21.52	21.85	19.20	15.9	20.31	20.65	20.28	16.9
		kW	2.03	2.03	2.03	2.0	2.28	2.28	2.27	2.3	2.56	2.55	2.55	2.6	2.85	2.85	2.85	2.9	3.19	3.19	3.18	3.2	3.58	3.58	3.57	3.6
		Amps	7.56	7.55	7.53	7.6	8.63	8.63	8.61	8.7	9.83	9.83	9.81	9.9	11.13	11.13	11.11	11.2	12.59	12.58	12.56	12.6	14.29	14.28	14.26	14.3
		Hi PR	267	268	270	274.5	308	309	311	315.9	352	353	355	359.3	398	400	401	405.9	449	450	452	456.3	502	504	505	510.0
		Lo PR	127	129	132	137.0	128	136	139	144.5	141	143	146	151.0	147	148	151	156.6	152	154	157	162.0	159	160	164	168.8
85	900	MBh	36.0	36.5	37.5	39.2	35.7	36.2	37.2	38.9	34.7	35.2	36.3	37.9	33.1	33.6	34.7	36.3	31.2	31.7	32.7	34.4	29.4	29.9	31.0	32.6
		S/T	0.85	0.80	0.69	0.6	0.86	0.80	0.69	0.6	0.89	0.83	0.72	0.6	0.93	0.86	0.74	0.6	0.98	0.91	0.78	0.6	1.00	1.00	0.86	0.7
		ΔT	31.07	29.35	26.13	22.8	31.02	29.30	26.08	22.8	31.26	29.54	26.32	23.0	31.00	29.28	26.06	22.7	30.77	29.05	25.83	22.5	29.69	30.13	26.91	23.6
		kW	2.00	1.99	1.99	2.0	2.24	2.24	2.24	2.3	2.52	2.52	2.51	2.5	2.82	2.82	2.81	2.8	3.15	3.15	3.15	3.2	3.54	3.54	3.54	3.6
		Amps	7.40	7.40	7.38	7.5	8.48	8.47	8.45	8.5	9.68	9.67	9.65	9.7	10.98	10.97	10.95	11.0	12.43	12.42	12.40	12.5	14.13	14.13	14.11	14.2
		Hi PR	261	263	264	269.0	303	304	306	310.3	346	347	349	353.7	393	394	396	400.4	443	444	446	450.7	497	498	500	504.4
		Lo PR	114	125	128	133.4	114	133	136	140.9	114	139	142	147.5	115	142	148	153.0	115	142	153	158.5	155	141	160	165.3
	1220	MBh	36.9	37.4	38.4	40.1	36.6	37.1	38.1	39.8	35.6	36.1	37.2	38.8	34.0	34.5	35.6	37.2	32.1	32.6	33.6	35.3	30.3	30.8	31.9	33.5
		S/T	1.00	0.96	0.82	0.7	1.00	0.97	0.83	0.7	1.00	1.00	0.86	0.7	1.00	1.00	0.89	0.7	1.00	1.00	0.93	0.8	1.00	1.00	1.00	0.8
		ΔT	27.48	26.84	23.63	20.3	27.24	26.80	23.58	20.2	26.55	26.93	23.82	20.5	25.36	25.73	23.56	20.2	23.90	24.28	23.33	20.0	22.57	22.95	23.74	21.1
		kW	2.03	2.03	2.02	2.0	2.27	2.27	2.27	2.3	2.55	2.55	2.54	2.6	2.85	2.85	2.84	2.9	3.18	3.18	3.18	3.2	3.58	3.57	3.57	3.6
		Amps	7.54	7.53	7.51	7.6	8.61	8.61	8.59	8.7	9.81	9.81	9.79	9.9	11.11	11.11	11.09	11.2	12.57	12.56	12.54	12.6	14.27	14.26	14.24	14.3
		Hi PR	266	268	269	273.9	308	309	311	315.3	351	352	354	358.6	398	399	401	405.3	448	449	451	455.6	502	503	505	509.4
		Lo PR	127	129	132	137.2	135	136	139	144.6	141	143	146	151.2	147	148	152	156.7	115	142	157	162.2	159	161	166	169.0
	1350	MBh	37.4	37.9	38.9	40.5	37.0	37.5	38.6	40.2	36.1	36.6	37.7	39.3	34.5	35.0	36.1	37.7	32.6	33.1	34.1	35.7	30.8	31.3	32.3	34.0
		S/T	1.00	1.00	0.87	0.7	1.00	1.00	0.88	0.7	1.00	1.00	0.91	0.7	1.00	1.00	0.94	0.8	1.00	1.00	0.98	0.8	1.00	1.00	1.00	0.9
		ΔT	25.15	25.49	22.87	19.5	24.94	25.28	22.83	19.5	24.31	24.65	23.07	19.7	23.24	23.57	22.81	19.5	21.92	22.26	22.58	19.2	20.72	21.06	21.77	20.3
		kW	2.04	2.03	2.03	2.0	2.28	2.28	2.28	2.3	2.56	2.56	2.55	2.6	2.86	2.86	2.85	2.9	3.19	3.19	3.19	3.2	3.58	3.58	3.58	3.6
		Amps	7.58	7.57	7.55	7.6	8.65	8.65	8.63	8.7	9.86	9.85	9.83	9.9	11.15	11.15	11.13	11.2	12.61	12.60	12.58	12.7	14.31	14.30	14.28	14.4
		Hi PR	268	269	271	275.8	310	311	313	317.1	353	354	356	360.5	400	401	403	407.2	450	451	453	457.5	504	505	507	511.2
		Lo PR	129	143	134	138.8	136	143	141	146.3	143	145	148	152.9	149	150	153	158.4	154	156	159	163.9	161	162	167	170.7

IDB: Entering Indoor Dry Bulb Temperature Shaded area reflects AHRI (TVA) conditions **W = Total system power**

High and low pressures are measured at the liquid and suction access fittings. **Amps: Unit amps (comp.+ evaporator + condenser fan motors)**

Design Subcooling, 16 - 19 °F @ the liquid access fitting connection ARI 95 test conditions. Design Superheat 8 - 12°F @ the compressor suction access fitting connection.

			Outdoor Ambient Temperature																							
			65				75				85				95				105				115			
			Entering Indoor Wet Bulb Temperature																							
IDB	Airflow	ID WB	59	63	67	71	59	63	67	71	59	63	67	71	59	63	67	71	59	63	67	71	59	63	67	71
70	1200	MBh	46.1	46.8	48.2	-	45.7	46.3	47.7	-	44.5	45.1	46.5	-	42.4	43.0	44.4	-	39.8	40.4	41.8	-	37.4	38.1	39.5	-
		S/T	0.58	0.53	0.42	-	0.59	0.53	0.42	-	0.61	0.55	0.44	-	0.63	0.57	0.45	-	0.67	0.60	0.47	-	0.75	0.67	0.54	-
		ΔT	20.41	18.64	15.33	-	20.37	18.59	15.28	-	20.62	18.84	15.53	-	20.35	18.57	15.26	-	20.11	18.34	15.02	-	21.22	19.45	16.14	-
		kW	2.68	2.67	2.67	-	2.99	2.99	2.98	-	3.34	3.34	3.33	-	3.72	3.72	3.71	-	4.14	4.14	4.13	-	4.64	4.64	4.63	-
		Amps	9.48	9.47	9.45	-	10.85	10.84	10.81	-	12.37	12.36	12.34	-	14.02	14.01	13.99	-	15.86	15.85	15.83	-	18.02	18.01	17.99	-
		Hi PR	266	267	269	-	308	309	311	-	352	353	355	-	400	401	403	-	451	453	454	-	506	507	509	-
		Lo PR	128	130	133	-	136	137	141	-	141	144	148	-	142	146	153	-	143	147	157	-	139	144	153	-
	1580	MBh	47.2	47.9	49.3	-	46.8	47.4	48.8	-	45.6	46.2	47.6	-	43.5	44.1	45.5	-	40.9	41.5	42.9	-	38.5	39.2	40.6	-
		S/T	0.67	0.59	0.46	-	0.67	0.60	0.46	-	0.70	0.62	0.48	-	0.72	0.64	0.49	-	0.76	0.67	0.51	-	0.85	0.76	0.59	-
		ΔT	18.11	16.33	13.02	-	18.06	16.29	12.97	-	18.31	16.54	13.22	-	18.04	16.27	12.96	-	17.81	16.03	12.72	-	18.92	17.14	13.83	-
		kW	2.71	2.71	2.70	-	3.02	3.02	3.02	-	3.37	3.37	3.37	-	3.75	3.75	3.75	-	4.18	4.17	4.17	-	4.67	4.67	4.67	-
		Amps	9.64	9.63	9.60	-	11.00	10.99	10.97	-	12.52	12.51	12.49	-	14.17	14.16	14.14	-	16.01	16.00	15.98	-	18.17	18.16	18.14	-
		Hi PR	270	271	273	-	313	314	316	-	357	358	360	-	405	406	408	-	456	457	459	-	511	512	514	-
		Lo PR	132	133	136	-	139	141	144	-	146	148	151	-	148	152	157	-	149	153	163	-	146	150	160	-
	1800	MBh	48.0	48.7	50.1	-	47.6	48.3	49.7	-	46.4	47.1	48.4	-	44.3	44.9	46.3	-	41.7	42.4	43.8	-	39.4	40.0	41.4	-
		S/T	0.71	0.62	0.48	-	0.71	0.63	0.48	-	0.74	0.65	0.50	-	0.76	0.67	0.51	-	0.80	0.70	0.53	-	0.90	0.80	0.61	-
		ΔT	17.11	15.34	12.03	-	17.06	15.29	11.98	-	17.31	15.54	12.23	-	17.04	15.27	11.96	-	16.81	15.03	11.72	-	17.92	16.14	12.83	-
		kW	2.73	2.72	2.72	-	3.04	3.04	3.03	-	3.39	3.39	3.38	-	3.77	3.77	3.76	-	4.19	4.19	4.18	-	4.69	4.69	4.68	-
		Amps	9.70	9.69	9.67	-	11.07	11.06	11.03	-	12.59	12.58	12.56	-	14.24	14.23	14.20	-	16.08	16.07	16.04	-	18.24	18.23	18.21	-
		Hi PR	273	274	276	-	315	316	318	-	359	361	362	-	407	408	410	-	458	460	462	-	513	515	516	-
		Lo PR	134	135	139	-	142	143	147	-	149	150	154	-	149	155	159	-	150	155	165	-	148	153	162	-
75	1200	MBh	46.3	47.0	48.4	50.5	45.9	46.6	48.0	50.1	44.7	45.4	46.8	48.9	42.6	43.3	44.7	46.8	40.0	40.7	42.1	44.2	37.7	38.3	39.7	41.9
		S/T	0.69	0.63	0.52	0.4	0.70	0.64	0.53	0.4	0.72	0.66	0.55	0.4	0.75	0.69	0.57	0.4	0.79	0.72	0.59	0.5	0.88	0.80	0.67	0.5
		ΔT	24.31	22.54	19.23	15.8	24.27	22.49	19.18	15.7	24.52	22.74	19.43	16.0	24.25	22.47	19.16	15.7	24.01	22.24	18.92	15.5	25.12	23.35	20.04	16.6
		kW	2.67	2.67	2.67	2.7	2.99	2.98	2.98	3.0	3.34	3.33	3.33	3.4	3.72	3.71	3.71	3.7	4.14	4.14	4.13	4.2	4.64	4.63	4.63	4.7
		Amps	9.48	9.46	9.44	9.5	10.84	10.83	10.81	10.9	12.36	12.35	12.33	12.4	14.01	14.00	13.98	14.1	15.85	15.84	15.82	15.9	18.01	18.00	17.98	18.1
		Hi PR	266	267	269	273.6	308	309	311	315.9	353	354	356	360.2	400	401	403	407.9	452	453	455	459.4	507	508	510	514.3
		Lo PR	128	130	133	138.4	136	137	141	146.3	139	144	148	153.2	139	149	153	159.0	139	149	159	164.7	139	147	156	165.4
	1580	MBh	47.4	48.1	49.5	51.6	47.0	47.7	49.1	51.2	45.8	46.5	47.9	50.0	43.7	**44.4**	45.8	47.9	41.1	41.8	43.2	45.3	38.8	39.4	40.8	43.0
		S/T	0.81	0.73	0.59	0.5	0.81	0.74	0.60	0.5	0.84	0.76	0.62	0.5	0.87	**0.79**	0.64	0.5	0.92	0.83	0.67	0.5	1.00	0.93	0.75	0.6
		ΔT	22.01	20.23	16.92	13.5	21.96	20.19	16.87	13.4	22.21	20.44	17.12	13.7	21.94	**20.17**	16.86	13.4	21.71	19.93	16.62	13.2	22.31	21.04	17.73	14.3
		kW	2.71	2.71	2.70	2.7	3.02	3.02	3.01	3.0	3.37	3.37	3.36	3.4	3.75	**3.75**	3.74	3.8	4.18	4.17	4.17	4.2	4.67	4.67	4.66	4.7
		Amps	9.63	9.62	9.59	9.7	10.99	10.98	10.96	11.1	12.51	12.50	12.48	12.6	14.16	**14.15**	14.13	14.2	16.00	15.99	15.97	16.1	18.16	18.15	18.13	18.2
		Hi PR	271	272	274	278.2	313	314	316	320.5	357	358	360	364.8	405	**406**	408	412.5	456	457	459	464.0	511	512	514	518.9
		Lo PR	132	133	136	142.0	139	141	144	149.8	139	148	151	156.7	139	**154**	157	162.6	140	157	163	168.3	150	154	162	172.9
	1800	MBh	48.3	48.9	50.3	52.5	47.9	48.5	49.9	52.0	46.6	47.3	48.7	50.8	44.5	45.2	46.6	48.7	42.0	42.6	44.0	46.2	39.6	40.3	41.7	43.8
		S/T	0.86	0.78	0.63	0.5	0.87	0.78	0.63	0.5	0.90	0.81	0.66	0.5	0.93	0.84	0.67	0.5	0.98	0.88	0.70	0.5	1.00	0.99	0.79	0.6
		ΔT	21.01	19.24	15.93	12.5	20.96	19.19	15.88	12.4	21.21	19.44	16.13	12.7	20.94	19.17	15.86	12.4	20.71	18.93	15.62	12.2	20.01	20.04	16.73	13.3
		kW	2.72	2.72	2.72	2.7	3.04	3.03	3.03	3.1	3.39	3.39	3.38	3.4	3.77	3.76	3.76	3.8	4.19	4.19	4.18	4.2	4.69	4.68	4.68	4.7
		Amps	9.69	9.68	9.66	9.8	11.06	11.05	11.02	11.1	12.58	12.57	12.55	12.7	14.23	14.22	14.19	14.3	16.07	16.06	16.04	16.1	18.23	18.22	18.20	18.3
		Hi PR	273	274	276	280.7	315	316	318	323.0	360	361	363	367.3	407	408	410	415.0	459	460	462	466.4	514	515	517	521.3
		Lo PR	134	136	139	144.3	139	143	147	152.2	140	150	154	159.1	139	156	159	165.0	139	159	165	170.7	156	156	166	175.3

IDB: Entering Indoor Dry Bulb Temperature

Shaded area reflects AHRI (TVA) conditions

W = Total system power

High and low pressures are measured at the liquid and suction access fittings.

Amps: Unit amps (comp.+ evaporator + condenser fan motors)

Design Subcooling, 16 - 19 °F @ the liquid access fitting connection ARI 95 test conditions. Design Superheat 8 - 12°F @ the compressor suction access fitting connection.

			Outdoor Ambient Temperature																							
			65				75				85				95				105				115			
			Entering Indoor Wet Bulb Temperature																							
IDB	Airflow	ID WB	59	63	67	71	59	63	67	71	59	63	67	71	59	63	67	71	59	63	67	71	59	63	67	71
80	1200	MBh	46.6	47.2	48.6	50.8	46.2	46.8	48.2	50.4	44.9	45.6	47.0	49.1	42.8	43.5	44.9	47.0	40.3	40.9	42.3	44.5	37.9	38.6	40.0	42.1
		S/T	0.80	0.74	0.63	0.5	0.81	0.74	0.63	0.5	0.84	0.77	0.66	0.5	0.87	0.80	0.68	0.6	0.92	0.84	0.71	0.6	1.00	0.93	0.79	0.6
		ΔT	28.24	26.47	23.16	19.7	28.19	26.42	23.11	19.7	28.44	26.67	23.36	19.9	28.17	26.40	23.09	19.7	27.94	26.16	22.85	19.4	28.73	27.27	23.96	20.5
		kW	2.67	2.67	2.67	2.7	2.99	2.99	2.98	3.0	3.34	3.34	3.33	3.4	3.72	3.72	3.71	3.7	4.14	4.14	4.13	4.2	4.64	4.64	4.63	4.7
		Amps	9.48	9.47	9.45	9.6	10.85	10.84	10.81	10.9	12.37	12.36	12.34	12.4	14.02	14.01	13.98	14.1	15.86	15.85	15.83	15.9	18.02	18.01	17.99	18.1
		Hi PR	266	268	269	274.1	309	310	312	316.4	353	354	356	360.7	401	402	404	408.4	452	453	455	459.9	507	508	510	514.8
		Lo PR	127	130	133	138.9	127	138	141	146.8	128	145	148	153.7	127	151	154	159.6	128	153	160	165.3	146	149	159	168.6
	1580	MBh	47.7	48.3	49.7	51.9	47.3	47.9	49.3	51.5	46.0	46.7	48.1	50.2	43.9	44.6	**46.0**	48.1	41.4	42.0	43.4	45.6	39.0	39.7	41.1	43.2
		S/T	0.95	0.87	0.73	0.6	0.95	0.87	0.73	0.6	0.99	0.91	0.76	0.6	1.00	0.94	**0.79**	0.6	1.00	0.99	0.82	0.7	1.00	1.00	0.92	0.7
		ΔT	25.94	24.16	20.85	17.4	25.89	24.11	20.80	17.4	26.14	24.36	21.05	17.6	25.28	24.09	**20.78**	17.4	23.80	23.86	20.55	17.1	22.45	22.83	21.66	18.2
		kW	2.71	2.71	2.70	2.7	3.02	3.02	3.02	3.0	3.37	3.37	3.37	3.4	3.75	3.75	**3.75**	3.8	4.18	4.17	4.17	4.2	4.67	4.67	4.67	4.7
		Amps	9.63	9.62	9.60	9.7	11.00	10.99	10.97	11.1	12.52	12.51	12.49	12.6	14.17	14.16	**14.14**	14.2	16.01	16.00	15.98	16.1	18.17	18.16	18.14	18.2
		Hi PR	271	272	274	278.7	313	314	316	321.0	358	359	361	365.3	405	406	**408**	413.0	457	458	460	464.5	512	513	515	519.4
		Lo PR	128	134	137	142.5	127	142	145	150.4	127	149	152	157.3	153	152	**158**	163.2	158	152	163	168.9	164	163	165	176.1
	1800	MBh	48.5	49.2	50.6	52.7	48.1	48.8	50.2	52.3	46.9	47.5	48.9	51.1	44.8	45.4	46.8	49.0	42.2	42.9	44.3	46.4	39.9	40.5	41.9	44.1
		S/T	1.00	0.93	0.78	0.6	1.00	0.94	0.78	0.6	1.00	0.97	0.81	0.6	1.00	1.00	0.84	0.7	1.00	1.00	0.87	0.7	1.00	1.00	0.98	0.8
		ΔT	24.50	23.16	19.85	16.4	24.29	23.12	19.80	16.4	23.67	23.36	20.05	16.6	22.61	22.95	19.79	16.4	21.31	21.65	19.55	16.1	20.13	20.46	20.66	17.2
		kW	2.73	2.72	2.72	2.7	3.04	3.04	3.03	3.1	3.39	3.39	3.38	3.4	3.77	3.77	3.76	3.8	4.19	4.19	4.18	4.2	4.69	4.69	4.68	4.7
		Amps	9.70	9.69	9.67	9.8	11.06	11.05	11.03	11.1	12.59	12.58	12.55	12.7	14.24	14.23	14.20	14.3	16.08	16.07	16.04	16.1	18.24	18.23	18.20	18.3
		Hi PR	273	275	277	281.2	316	317	319	323.5	360	361	363	367.8	408	409	411	415.5	459	460	462	466.9	514	515	517	521.8
		Lo PR	134	136	139	144.9	142	144	147	152.8	149	151	154	159.7	155	157	160	165.5	161	162	166	171.3	168	170	169	178.4
85	1200	MBh	47.4	48.0	49.4	51.6	47.0	47.6	49.0	51.2	45.7	46.4	47.8	49.9	43.6	44.3	45.7	47.8	41.1	41.7	43.1	45.3	38.7	39.4	40.8	42.9
		S/T	0.88	0.82	0.71	0.6	0.89	0.83	0.72	0.6	0.92	0.86	0.74	0.6	0.96	0.89	0.77	0.6	1.00	0.94	0.81	0.7	1.00	1.00	0.89	0.7
		ΔT	31.72	29.95	26.64	23.2	31.68	29.90	26.59	23.2	31.92	30.15	26.84	23.4	31.66	29.88	26.57	23.1	31.11	29.65	26.33	22.9	29.33	29.83	27.44	24.0
		kW	2.68	2.68	2.67	2.7	2.99	2.99	2.99	3.0	3.35	3.34	3.34	3.4	3.72	3.72	3.72	3.7	4.15	4.15	4.14	4.2	4.64	4.64	4.64	4.7
		Amps	9.51	9.50	9.47	9.6	10.87	10.86	10.84	10.9	12.40	12.39	12.36	12.5	14.04	14.03	14.01	14.1	15.89	15.87	15.85	16.0	18.05	18.03	18.01	18.1
		Hi PR	268	269	271	275.4	310	311	313	317.7	354	355	357	362.0	402	403	405	409.7	453	455	456	461.1	508	509	511	516.0
		Lo PR	115	132	135	140.9	115	140	143	148.8	115	142	150	155.7	115	142	156	161.5	154	142	162	167.2	158	157	164	173.1
	1580	MBh	48.5	49.1	50.5	52.7	48.1	48.7	50.1	52.2	46.8	47.5	48.9	51.0	44.7	45.4	46.8	48.9	42.2	42.8	44.2	46.4	39.8	40.5	41.9	44.0
		S/T	1.00	0.98	0.84	0.7	1.00	0.98	0.84	0.7	1.00	1.00	0.87	0.7	1.00	1.00	0.90	0.7	1.00	1.00	0.94	0.8	1.00	1.00	1.00	0.9
		ΔT	27.89	27.64	24.33	20.9	27.65	27.60	24.28	20.9	26.95	27.33	24.53	21.1	25.74	26.12	24.27	20.8	24.26	24.64	24.03	20.6	22.91	23.29	24.09	21.7
		kW	2.72	2.71	2.71	2.7	3.03	3.03	3.02	3.0	3.38	3.38	3.37	3.4	3.76	3.76	3.75	3.8	4.18	4.18	4.17	4.2	4.68	4.68	4.67	4.7
		Amps	9.66	9.65	9.63	9.7	11.03	11.01	10.99	11.1	12.55	12.54	12.51	12.6	14.20	14.19	14.16	14.3	16.04	16.03	16.00	16.1	18.20	18.19	18.16	18.3
		Hi PR	272	273	275	280.0	315	316	318	322.3	359	360	362	366.6	407	408	410	414.3	458	459	461	465.7	513	514	516	520.6
		Lo PR	134	136	139	144.5	142	142	147	152.4	149	150	154	159.3	155	156	160	165.1	160	162	165	170.8	168	169	172	178.0
	1800	MBh	49.3	50.0	51.4	53.5	48.9	49.5	50.9	53.1	47.7	48.3	49.7	51.9	45.6	46.2	47.6	49.8	43.0	43.7	45.1	47.2	40.6	41.3	42.7	44.8
		S/T	1.00	1.00	0.90	0.7	1.00	1.00	0.91	0.7	1.00	1.00	0.94	0.8	1.00	1.00	0.97	0.8	1.00	1.00	1.00	0.8	1.00	1.00	1.00	0.9
		ΔT	24.90	25.23	23.33	19.9	24.69	25.02	23.29	19.9	24.07	24.41	23.54	20.1	23.01	23.34	23.27	19.8	21.71	22.05	22.75	19.6	20.53	20.86	21.57	20.7
		kW	2.73	2.73	2.72	2.7	3.04	3.04	3.04	3.1	3.40	3.39	3.39	3.4	3.77	3.77	3.77	3.8	4.20	4.20	4.19	4.2	4.69	4.69	4.69	4.7
		Amps	9.73	9.72	9.69	9.8	11.09	11.08	11.06	11.2	12.61	12.60	12.58	12.7	14.26	14.25	14.23	14.3	16.10	16.09	16.07	16.2	18.26	18.25	18.23	18.3
		Hi PR	275	276	278	282.5	317	318	320	324.7	361	362	364	369.0	409	410	412	416.8	460	462	464	468.2	515	517	518	523.1
		Lo PR	136	143	141	146.8	144	146	149	154.7	151	153	156	161.6	157	159	162	167.5	163	164	168	173.2	170	172	175	180.4

IDB: Entering Indoor Dry Bulb Temperature

Shaded area reflects AHRI (TVA) conditions

W = Total system power

High and low pressures are measured at the liquid and suction access fittings.

Amps: Unit amps (comp.+ evaporator + condenser fan motors)

Design Subcooling, 16 - 19 °F @ the liquid access fitting connection ARI 95 test conditions. Design Superheat 8 - 12°F @ the compressor suction access fitting connection.

			Outdoor Ambient Temperature																							
			65				75				85				95				105				115			
			Entering Indoor Wet Bulb Temperature																							
IDB	Airflow	ID WB	59	63	67	71	59	63	67	71	59	63	67	71	59	63	67	71	59	63	67	71	59	63	67	71
70	1500	MBh	57.8	58.7	60.4	-	57.3	58.1	59.9	-	55.8	56.6	58.4	-	53.2	54.0	55.7	-	49.9	50.8	52.5	-	47.0	47.8	49.6	-
		S/T	0.59	0.53	0.42	-	0.60	0.54	0.43	-	0.62	0.56	0.44	-	0.64	0.58	0.46	-	0.68	0.61	0.48	-	0.76	0.68	0.54	-
		ΔT	20.85	18.99	15.53	-	20.80	18.94	15.48	-	21.06	19.20	15.74	-	20.78	18.92	15.46	-	20.53	18.67	15.21	-	21.69	19.84	16.37	-
		kW	3.72	3.72	3.71	-	4.16	4.16	4.15	-	4.66	4.65	4.65	-	5.19	5.19	5.18	-	5.79	5.78	5.78	-	6.49	6.48	6.48	-
		Amps	13.46	13.44	13.41	-	15.38	15.36	15.33	-	17.52	17.51	17.48	-	19.85	19.83	19.80	-	22.44	22.42	22.39	-	25.48	25.47	25.44	-
		Hi PR	261	262	264	-	302	303	305	-	346	347	349	-	392	393	395	-	443	444	446	-	496	498	499	-
		Lo PR	122	123	126	-	129	131	134	-	136	137	140	-	140	143	146	-	141	146	151	-	138	143	153	-
	1870	MBh	59.0	59.8	61.6	-	58.5	59.3	61.0	-	56.9	57.8	59.5	-	54.3	55.1	56.9	-	51.1	51.9	53.7	-	48.2	49.0	50.7	-
		S/T	0.66	0.59	0.46	-	0.66	0.59	0.46	-	0.69	0.62	0.48	-	0.71	0.63	0.49	-	0.75	0.66	0.51	-	0.85	0.75	0.59	-
		ΔT	18.95	17.09	13.63	-	18.90	17.04	13.58	-	19.16	17.30	13.84	-	18.88	17.02	13.56	-	18.63	16.78	13.31	-	19.79	17.94	14.47	-
		kW	3.76	3.76	3.75	-	4.20	4.20	4.19	-	4.70	4.69	4.68	-	5.23	5.23	5.22	-	5.83	5.82	5.82	-	6.53	6.52	6.52	-
		Amps	13.63	13.61	13.58	-	15.55	15.53	15.50	-	17.69	17.68	17.65	-	20.02	20.00	19.97	-	22.61	22.59	22.56	-	25.65	25.64	25.60	-
		Hi PR	265	266	267	-	306	307	309	-	349	350	352	-	396	397	399	-	446	447	449	-	500	501	503	-
		Lo PR	125	126	129	-	132	134	137	-	139	140	143	-	144	146	149	-	146	151	154	-	143	147	157	-
	2250	MBh	60.6	61.4	63.2	-	60.1	60.9	62.6	-	58.5	59.4	61.1	-	55.9	56.7	58.5	-	52.7	53.5	55.3	-	49.8	50.6	52.3	-
		S/T	0.71	0.63	0.48	-	0.72	0.63	0.48	-	0.75	0.66	0.50	-	0.77	0.68	0.51	-	0.81	0.71	0.53	-	0.91	0.81	0.61	-
		ΔT	17.47	15.62	12.15	-	17.42	15.57	12.10	-	17.68	15.83	12.36	-	17.40	15.55	12.08	-	17.15	15.30	11.83	-	18.32	16.46	12.99	-
		kW	3.79	3.79	3.78	-	4.23	4.23	4.22	-	4.73	4.72	4.71	-	5.26	5.26	5.25	-	5.86	5.85	5.85	-	6.56	6.55	6.55	-
		Amps	13.76	13.74	13.71	-	15.68	15.66	15.63	-	17.82	17.81	17.78	-	20.15	20.13	20.10	-	22.74	22.72	22.69	-	25.78	25.77	25.74	-
		Hi PR	268	269	271	-	309	311	312	-	353	354	356	-	399	401	402	-	450	451	453	-	504	505	507	-
		Lo PR	128	129	133	-	135	137	140	-	142	143	147	-	147	149	152	-	150	154	158	-	147	152	162	-
75	1500	MBh	58.1	59.0	60.7	63.4	57.6	58.4	60.2	62.9	56.1	56.9	58.7	61.3	53.5	54.3	56.0	58.7	50.3	51.1	52.8	55.5	47.3	48.1	49.9	52.6
		S/T	0.71	0.65	0.53	0.4	0.71	0.65	0.54	0.4	0.74	0.67	0.56	0.4	0.77	0.70	0.58	0.4	0.81	0.74	0.60	0.5	0.90	0.82	0.68	0.5
		ΔT	24.93	23.07	19.61	16.0	24.88	23.02	19.56	16.0	25.14	23.28	19.82	16.2	24.86	23.00	19.54	15.9	24.61	22.76	19.29	15.7	25.77	23.92	20.45	16.9
		kW	3.72	3.71	3.71	3.7	4.16	4.16	4.15	4.2	4.65	4.65	4.64	4.7	5.19	5.18	5.18	5.2	5.78	5.78	5.77	5.8	6.48	6.48	6.47	6.5
		Amps	13.44	13.43	13.40	13.5	15.37	15.35	15.32	15.5	17.51	17.50	17.46	17.6	19.83	19.82	19.79	19.9	22.43	22.41	22.38	22.5	25.47	25.46	25.42	25.6
		Hi PR	261	262	264	268.7	303	304	305	310.1	346	347	349	353.4	393	394	396	400.1	443	444	446	450.5	497	498	500	504.2
		Lo PR	122	123	126	131.6	129	131	134	139.1	136	137	140	145.6	139	143	146	151.1	139	148	151	156.6	139	146	154	163.4
	1870	MBh	59.3	60.1	61.9	64.5	58.8	59.6	61.4	64.0	57.3	58.1	59.8	62.5	54.6	**55.4**	57.2	59.9	51.4	52.2	54.0	56.7	48.5	49.3	51.1	53.7
		S/T	0.80	0.72	0.59	0.4	0.80	0.73	0.59	0.5	0.84	0.76	0.62	0.5	0.86	**0.78**	0.63	0.5	0.91	0.82	0.66	0.5	1.00	0.92	0.75	0.6
		ΔT	23.03	21.17	17.71	14.1	22.98	21.12	17.66	14.1	23.24	21.38	17.92	14.3	22.96	**21.10**	17.64	14.0	22.71	20.86	17.39	13.8	23.57	22.02	18.55	15.0
		kW	3.76	3.75	3.75	3.8	4.20	4.20	4.19	4.2	4.69	4.69	4.68	4.7	5.23	**5.22**	5.22	5.2	5.82	5.82	5.81	5.8	6.52	6.52	6.51	6.5
		Amps	13.61	13.60	13.57	13.7	15.54	15.52	15.49	15.6	17.68	17.67	17.63	17.8	20.00	**19.99**	19.95	20.1	22.60	22.58	22.55	22.7	25.64	25.62	25.59	25.7
		Hi PR	265	266	268	272.3	306	307	309	313.7	349	351	352	357.1	396	**397**	399	403.7	447	448	450	454.1	500	501	503	507.8
		Lo PR	125	126	129	134.4	132	134	137	141.9	139	140	143	148.4	139	**146**	149	153.9	139	151	154	159.4	147	150	160	166.2
	2250	MBh	60.9	61.7	63.5	66.1	60.4	61.2	62.9	65.6	58.8	59.7	61.4	64.1	56.2	57.0	58.8	61.5	53.0	53.8	55.6	58.2	50.1	50.9	52.6	55.3
		S/T	0.88	0.79	0.63	0.5	0.88	0.79	0.64	0.5	0.92	0.83	0.66	0.5	0.95	0.85	0.68	0.5	0.99	0.89	0.71	0.5	1.00	1.00	0.80	0.6
		ΔT	21.55	19.70	16.23	12.6	21.50	19.65	16.18	12.6	21.76	19.91	16.44	12.9	21.48	19.63	16.16	12.6	21.24	19.38	15.91	12.3	20.23	20.54	17.08	13.5
		kW	3.79	3.78	3.78	3.8	4.23	4.23	4.22	4.3	4.72	4.72	4.71	4.7	5.26	5.25	5.25	5.3	5.85	5.85	5.84	5.9	6.55	6.55	6.54	6.6
		Amps	13.74	13.73	13.70	13.8	15.67	15.65	15.62	15.8	17.81	17.80	17.76	17.9	20.13	20.12	20.09	20.2	22.73	22.71	22.68	22.8	25.77	25.76	25.72	25.9
		Hi PR	268	269	271	275.8	310	311	313	317.2	353	354	356	360.6	400	401	403	407.3	450	451	453	457.6	504	505	507	511.3
		Lo PR	128	129	133	137.8	135	137	140	145.3	139	143	147	151.8	140	149	152	157.3	139	154	158	162.8	156	155	164	169.6

IDB: Entering Indoor Dry Bulb Temperature

Shaded area reflects AHRI (TVA) conditions

W = Total system power

High and low pressures are measured at the liquid and suction access fittings.

Amps: Unit amps (comp.+ evaporator + condenser fan motors)

Design Subcooling, 16 - 19 °F @ the liquid access fitting connection ARI 95 test conditions. Design Superheat 8 - 12°F @ the compressor suction access fitting connection.

			Outdoor Ambient Temperature																							
			65				75				85				95				105				115			
			Entering Indoor Wet Bulb Temperature																							
IDB	Airflow	ID WB	59	63	67	71	59	63	67	71	59	63	67	71	59	63	67	71	59	63	67	71	59	63	67	71
80	1500	MBh	58.4	59.3	61.0	63.7	57.9	58.7	60.5	63.2	56.4	57.2	59.0	61.6	53.8	54.6	56.3	59.0	50.6	51.4	53.1	55.8	47.6	48.4	50.2	52.9
		S/T	0.82	0.76	0.64	0.5	0.83	0.76	0.65	0.5	0.86	0.79	0.67	0.5	0.89	0.82	0.69	0.6	0.94	0.86	0.73	0.6	1.00	0.95	0.81	0.7
		ΔT	29.04	27.18	23.72	20.1	28.99	27.13	23.67	20.1	29.25	27.39	23.93	20.3	28.97	27.11	23.65	20.1	28.72	26.86	23.40	19.8	28.86	28.03	24.56	21.0
		kW	3.72	3.72	3.71	3.7	4.16	4.16	4.15	4.2	4.66	4.65	4.65	4.7	5.19	5.19	5.18	5.2	5.79	5.78	5.78	5.8	6.49	6.48	6.48	6.5
		Amps	13.45	13.44	13.41	13.6	15.38	15.36	15.33	15.5	17.52	17.51	17.47	17.6	19.84	19.83	19.80	19.9	22.44	22.42	22.39	22.5	25.48	25.47	25.43	25.6
		Hi PR	262	263	265	269.2	303	304	306	310.5	346	347	349	353.9	393	394	396	400.6	443	445	446	450.9	497	498	500	504.7
		Lo PR	122	124	127	132.1	127	131	134	139.6	127	138	141	146.2	128	143	146	151.7	128	149	152	157.1	146	148	157	163.9
	1870	MBh	59.6	60.4	62.2	64.8	59.1	59.9	61.7	64.3	57.6	58.4	60.1	62.8	54.9	55.8	**57.5**	60.2	51.7	52.5	54.3	57.0	48.8	49.6	51.4	54.0
		S/T	0.94	0.86	0.72	0.6	0.94	0.87	0.73	0.6	0.98	0.90	0.75	0.6	1.00	0.93	**0.78**	0.6	1.00	0.98	0.81	0.6	1.00	1.00	0.91	0.7
		ΔT	27.14	25.28	21.82	18.2	27.09	25.23	21.77	18.2	27.35	25.49	22.03	18.4	26.70	25.21	**21.75**	18.2	25.14	24.96	21.50	17.9	23.71	24.12	22.66	19.1
		kW	3.76	3.76	3.75	3.8	4.20	4.20	4.19	4.2	4.69	4.69	4.68	4.7	5.23	5.23	**5.22**	5.3	5.83	5.82	5.81	5.8	6.53	6.52	6.51	6.5
		Amps	13.62	13.61	13.58	13.7	15.55	15.53	15.50	15.6	17.69	17.68	17.64	17.8	20.01	20.00	**19.96**	20.1	22.61	22.59	22.56	22.7	25.65	25.63	25.60	25.7
		Hi PR	265	266	268	272.8	307	308	310	314.2	350	351	353	357.5	397	398	**400**	404.2	447	448	450	454.6	501	502	504	508.3
		Lo PR	125	127	130	135.0	127	134	137	142.4	127	141	144	149.0	145	146	**149**	154.5	150	152	155	159.9	157	158	161	166.7
	2250	MBh	61.2	62.0	63.8	66.4	60.7	61.5	63.2	65.9	59.1	60.0	61.7	64.4	56.5	57.3	59.1	61.8	53.3	54.1	55.9	58.6	50.4	51.2	52.9	55.6
		S/T	1.00	0.95	0.79	0.6	1.00	0.96	0.79	0.6	1.00	0.99	0.82	0.7	1.00	1.00	0.85	0.7	1.00	1.00	0.89	0.7	1.00	1.00	0.99	0.8
		ΔT	24.73	23.81	20.34	16.7	24.52	23.75	20.29	16.7	23.90	24.02	20.55	17.0	22.84	23.17	20.27	16.7	21.54	21.87	20.02	16.4	20.35	20.69	21.18	17.6
		kW	3.79	3.79	3.78	3.8	4.23	4.23	4.22	4.3	4.72	4.72	4.71	4.7	5.26	5.26	5.25	5.3	5.86	5.85	5.84	5.9	6.56	6.55	6.54	6.6
		Amps	13.75	13.74	13.71	13.9	15.68	15.66	15.63	15.8	17.82	17.81	17.77	17.9	20.14	20.13	20.10	20.2	22.74	22.72	22.69	22.8	25.78	25.77	25.73	25.9
		Hi PR	269	270	272	276.3	310	311	313	317.7	354	355	357	361.1	400	401	403	407.8	451	452	454	458.1	504	505	507	511.8
		Lo PR	128	130	133	138.3	136	137	141	145.8	142	144	147	152.3	148	153	153	157.9	153	155	158	163.3	160	162	165	170.1
85	1500	MBh	59.4	60.3	62.0	64.7	58.9	59.7	61.5	64.2	57.4	58.2	60.0	62.6	54.8	55.6	57.3	60.0	51.5	52.4	54.1	56.8	48.6	49.4	51.2	53.9
		S/T	0.91	0.84	0.73	0.6	0.91	0.85	0.73	0.6	0.95	0.88	0.76	0.6	0.98	0.91	0.79	0.7	1.00	0.96	0.82	0.7	1.00	1.00	0.91	0.8
		ΔT	32.68	30.83	27.36	23.8	32.63	30.78	27.31	23.7	32.89	31.04	27.57	24.0	32.61	30.76	27.29	23.7	31.24	30.51	27.04	23.5	29.46	29.96	28.20	24.6
		kW	3.73	3.73	3.72	3.8	4.17	4.17	4.16	4.2	4.66	4.66	4.65	4.7	5.20	5.20	5.19	5.2	5.80	5.79	5.78	5.8	6.50	6.49	6.48	6.5
		Amps	13.49	13.48	13.44	13.6	15.41	15.40	15.37	15.5	17.56	17.54	17.51	17.7	19.88	19.87	19.83	20.0	22.47	22.46	22.43	22.6	25.52	25.50	25.47	25.6
		Hi PR	263	264	266	270.4	304	305	307	311.8	348	349	351	355.1	394	395	397	401.8	445	446	448	452.2	498	499	501	505.9
		Lo PR	115	126	129	134.0	115	133	136	141.5	115	140	143	148.0	115	141	148	153.5	149	141	154	158.9	156	157	161	165.7
	1870	MBh	60.6	61.4	63.2	65.8	60.1	60.9	62.6	65.3	58.5	59.4	61.1	63.8	55.9	56.7	58.5	61.2	52.7	53.5	55.3	57.9	49.8	50.6	52.3	55.0
		S/T	1.00	0.97	0.83	0.7	1.00	0.98	0.83	0.7	1.00	1.00	0.86	0.7	1.00	1.00	0.89	0.7	1.00	1.00	0.94	0.8	1.00	1.00	1.00	0.8
		ΔT	29.46	28.93	25.46	21.9	29.20	28.88	25.41	21.8	28.46	28.86	25.67	22.1	27.18	27.58	25.39	21.8	25.62	26.02	25.14	21.6	24.19	24.60	25.45	22.7
		kW	3.77	3.76	3.76	3.8	4.21	4.21	4.20	4.2	4.70	4.70	4.69	4.7	5.24	5.23	5.23	5.3	5.83	5.83	5.82	5.9	6.53	6.53	6.52	6.6
		Amps	13.66	13.65	13.61	13.8	15.58	15.57	15.53	15.7	17.73	17.71	17.68	17.8	20.05	20.03	20.00	20.1	22.64	22.63	22.60	22.7	25.69	25.67	25.64	25.8
		Hi PR	266	268	269	274.0	308	309	311	315.4	351	352	354	358.8	398	399	401	405.5	448	449	451	455.8	502	503	505	509.5
		Lo PR	115	128	132	136.8	134	136	139	144.3	141	142	146	150.8	146	148	151	156.3	152	153	157	161.8	159	160	167	168.6
	2250	MBh	62.2	63.0	64.8	67.4	61.7	62.5	64.2	66.9	60.1	61.0	62.7	65.4	57.5	58.3	60.1	62.7	54.3	55.1	56.9	59.5	51.4	52.2	53.9	56.6
		S/T	1.00	1.00	0.92	0.7	1.00	1.00	0.92	0.8	1.00	1.00	0.95	0.8	1.00	1.00	0.99	0.8	1.00	1.00	1.00	0.8	1.00	1.00	1.00	0.9
		ΔT	25.12	25.46	23.98	20.4	24.91	25.25	23.93	20.3	24.30	24.63	24.19	20.6	23.23	23.57	23.91	20.3	21.94	22.27	22.98	20.1	20.75	21.09	21.79	21.2
		kW	3.80	3.79	3.79	3.8	4.24	4.24	4.23	4.3	4.73	4.73	4.72	4.8	5.27	5.26	5.26	5.3	5.86	5.86	5.85	5.9	6.56	6.56	6.55	6.6
		Amps	13.79	13.78	13.74	13.9	15.71	15.70	15.66	15.8	17.86	17.84	17.81	18.0	20.18	20.16	20.13	20.3	22.77	22.76	22.73	22.9	25.82	25.80	25.77	25.9
		Hi PR	270	271	273	277.6	311	313	314	318.9	355	356	358	362.3	401	403	404	409.0	452	453	455	459.3	506	507	508	513.1
		Lo PR	130	144	135	140.2	138	143	142	147.6	144	146	149	154.2	150	151	154	159.7	155	157	166	165.1	162	141	167	171.9

IDB: Entering Indoor Dry Bulb Temperature Shaded area reflects AHRI (TVA) conditions **W = Total system power**

High and low pressures are measured at the liquid and suction access fittings. **Amps: Unit amps (comp.+ evaporator + condenser fan motors)**

Design Subcooling, 16 - 19 °F @ the liquid access fitting connection ARI 95 test conditions. Design Superheat 8 - 12°F @ the compressor suction access fitting connection.

			Outdoor Ambient Temperature																							
			65				75				85				95				105				115			
			Entering Indoor Wet Bulb Temperature																							
IDB	Airflow	ID WB	59	63	67	71	59	63	67	71	59	63	67	71	59	63	67	71	59	63	67	71	59	63	67	71
70	1800	MBh	68.1	69.1	71.2	-	67.5	68.5	70.6	-	65.7	66.7	68.7	-	62.6	63.6	65.6	-	58.8	59.8	61.8	-	55.3	56.3	58.4	-
		S/T	0.59	0.53	0.42	-	0.59	0.53	0.43	-	0.62	0.56	0.44	-	0.64	0.57	0.46	-	0.67	0.60	0.48	-	0.75	0.68	0.54	-
		ΔT	20.27	18.51	15.23	-	20.22	18.46	15.18	-	20.46	18.71	15.43	-	20.20	18.44	15.16	-	19.96	18.21	14.93	-	21.06	19.31	16.03	-
		kW	4.32	4.31	4.31	-	4.82	4.81	4.81	-	5.38	5.37	5.36	-	5.98	5.98	5.97	-	6.66	6.65	6.64	-	7.45	7.44	7.43	-
		Amps	14.97	14.96	14.92	-	17.15	17.13	17.09	-	19.57	19.55	19.52	-	22.20	22.18	22.14	-	25.13	25.11	25.08	-	28.57	28.55	28.52	-
		Hi PR	267	268	270	-	309	310	312	-	353	355	356	-	401	402	404	-	453	454	456	-	508	509	511	-
		Lo PR	126	128	131	-	134	135	139	-	141	142	145	-	142	147	151	-	143	147	157	-	140	144	154	-
	2380	MBh	69.8	70.8	72.8	-	69.2	70.1	72.2	-	67.3	68.3	70.4	-	64.2	65.2	67.3	-	60.4	61.4	63.5	-	57.0	57.9	60.0	-
		S/T	0.67	0.60	0.46	-	0.68	0.60	0.47	-	0.71	0.63	0.49	-	0.73	0.65	0.50	-	0.76	0.68	0.52	-	0.86	0.77	0.60	-
		ΔT	17.94	16.18	12.90	-	17.89	16.14	12.86	-	18.14	16.38	13.10	-	17.88	16.12	12.84	-	17.64	15.88	12.60	-	18.74	16.98	13.70	-
		kW	4.38	4.37	4.36	-	4.88	4.87	4.86	-	5.43	5.43	5.42	-	6.04	6.03	6.02	-	6.71	6.71	6.70	-	7.50	7.50	7.49	-
		Amps	15.22	15.20	15.17	-	17.39	17.38	17.34	-	19.82	19.80	19.76	-	22.44	22.43	22.39	-	25.38	25.36	25.32	-	28.82	28.80	28.76	-
		Hi PR	271	272	274	-	314	315	317	-	358	359	361	-	406	407	409	-	458	459	461	-	513	514	516	-
		Lo PR	130	131	134	-	137	139	142	-	144	146	149	-	149	152	155	-	149	153	160	-	146	150	160	-
	2700	MBh	71.0	71.9	74.0	-	70.3	71.3	73.4	-	68.5	69.5	71.6	-	65.4	66.4	68.5	-	61.6	62.6	64.7	-	58.2	59.1	61.2	-
		S/T	0.71	0.63	0.48	-	0.72	0.63	0.48	-	0.74	0.66	0.50	-	0.77	0.68	0.52	-	0.80	0.71	0.53	-	0.91	0.81	0.62	-
		ΔT	16.99	15.23	11.95	-	16.94	15.18	11.90	-	17.18	15.43	12.15	-	16.92	15.16	11.88	-	16.68	14.93	11.65	-	17.79	16.03	12.75	-
		kW	4.40	4.39	4.39	-	4.90	4.89	4.89	-	5.46	5.45	5.44	-	6.06	6.06	6.05	-	6.74	6.73	6.72	-	7.53	7.52	7.51	-
		Amps	15.32	15.30	15.27	-	17.49	17.48	17.44	-	19.92	19.90	19.87	-	22.55	22.53	22.49	-	25.48	25.46	25.42	-	28.92	28.90	28.87	-
		Hi PR	274	275	277	-	316	317	319	-	360	362	364	-	408	410	411	-	460	461	463	-	515	516	518	-
		Lo PR	132	133	137	-	140	141	144	-	146	148	151	-	150	154	157	-	150	157	163	-	148	154	162	-
75	1800	MBh	68.5	69.5	71.5	74.7	67.9	68.8	70.9	74.1	66.1	67.0	69.1	72.3	63.0	63.9	66.0	69.2	59.2	60.1	62.2	65.4	55.7	56.7	58.7	61.9
		S/T	0.70	0.64	0.53	0.4	0.70	0.64	0.53	0.4	0.73	0.67	0.55	0.4	0.76	0.69	0.57	0.4	0.80	0.73	0.60	0.5	0.89	0.81	0.67	0.5
		ΔT	24.13	22.37	19.09	15.7	24.08	22.32	19.04	15.6	24.33	22.57	19.29	15.9	24.06	22.31	19.02	15.6	23.83	22.07	18.79	15.4	24.93	23.17	19.89	16.5
		kW	4.32	4.31	4.30	4.3	4.82	4.81	4.80	4.8	5.37	5.37	5.36	5.4	5.98	5.97	5.96	6.0	6.65	6.65	6.64	6.7	7.44	7.44	7.43	7.5
		Amps	14.96	14.94	14.90	15.1	17.13	17.11	17.08	17.2	19.56	19.54	19.50	19.7	22.18	22.17	22.13	22.3	25.12	25.10	25.06	25.2	28.56	28.54	28.50	28.7
		Hi PR	267	268	270	274.5	309	310	312	316.9	354	355	357	361.4	402	403	405	409.3	453	454	456	460.9	508	509	511	516.0
		Lo PR	126	128	131	136.4	134	135	139	144.1	139	142	146	150.9	139	148	151	156.7	139	150	157	162.3	140	148	156	165.5
	2380	MBh	70.1	71.1	73.2	76.3	69.5	70.5	72.6	75.7	67.7	68.7	70.7	73.9	64.6	**65.6**	67.6	70.8	60.8	61.8	63.8	67.0	57.3	58.3	60.4	63.5
		S/T	0.81	0.74	0.60	0.5	0.82	0.74	0.60	0.5	0.85	0.77	0.63	0.5	0.88	**0.80**	0.65	0.5	0.93	0.84	0.68	0.5	1.00	0.94	0.76	0.6
		ΔT	21.81	20.05	16.77	13.4	21.76	20.00	16.72	13.3	22.01	20.25	16.97	13.6	21.74	**19.98**	16.70	13.3	21.51	19.75	16.47	13.1	21.90	20.85	17.57	14.2
		kW	4.37	4.37	4.36	4.4	4.87	4.87	4.86	4.9	5.43	5.43	5.42	5.5	6.03	**6.03**	6.02	6.1	6.71	6.70	6.70	6.7	7.50	7.50	7.49	7.5
		Amps	15.21	15.19	15.15	15.3	17.38	17.36	17.32	17.5	19.80	19.79	19.75	19.9	22.43	**22.41**	22.38	22.5	25.36	25.35	25.31	25.5	28.80	28.79	28.75	28.9
		Hi PR	271	273	275	279.2	314	315	317	321.6	358	360	361	366.1	406	**407**	409	414.0	458	459	461	465.6	513	514	516	520.7
		Lo PR	130	131	135	139.9	137	139	142	147.7	139	146	149	154.5	140	**152**	155	160.3	139	157	160	165.9	139	154	162	173.0
	2700	MBh	71.3	72.3	74.4	77.5	70.7	71.7	73.7	76.9	68.9	69.9	71.9	75.1	65.8	66.8	68.8	72.0	62.0	63.0	65.0	68.2	58.5	59.5	61.6	64.7
		S/T	0.87	0.78	0.63	0.5	0.87	0.79	0.63	0.5	0.91	0.82	0.66	0.5	0.94	0.85	0.68	0.5	0.98	0.89	0.71	0.5	1.00	0.99	0.80	0.6
		ΔT	20.85	19.09	15.81	12.4	20.80	19.04	15.76	12.4	21.05	19.29	16.01	12.6	20.78	19.03	15.74	12.3	20.55	18.79	15.51	12.1	19.70	19.89	16.61	13.2
		kW	4.40	4.39	4.38	4.4	4.90	4.89	4.88	4.9	5.45	5.45	5.44	5.5	6.06	6.05	6.04	6.1	6.73	6.73	6.72	6.8	7.52	7.52	7.51	7.5
		Amps	15.31	15.29	15.25	15.4	17.48	17.46	17.43	17.6	19.91	19.89	19.85	20.0	22.53	22.51	22.48	22.6	25.46	25.45	25.41	25.6	28.91	28.89	28.85	29.0
		Hi PR	274	275	277	281.6	316	317	319	324.0	361	362	364	368.5	409	410	412	416.4	460	461	463	468.0	515	516	518	523.0
		Lo PR	132	134	137	142.2	140	141	145	150.0	139	148	151	156.8	139	154	157	162.5	140	159	163	168.2	157	156	166	175.3

IDB: Entering Indoor Dry Bulb Temperature

Shaded area reflects AHRI (TVA) conditions

W = Total system power

High and low pressures are measured at the liquid and suction access fittings.

Amps: Unit amps (comp.+ evaporator + condenser fan motors)

Design Subcooling, 16 - 19 °F @ the liquid access fitting connection ARI 95 test conditions. Design Superheat 8 - 12°F @ the compressor suction access fitting connection.

			Outdoor Ambient Temperature																							
			65				75				85				95				105				115			
			Entering Indoor Wet Bulb Temperature																							
IDB	Airflow	ID WB	59	63	67	71	59	63	67	71	59	63	67	71	59	63	67	71	59	63	67	71	59	63	67	71
80	1800	MBh	68.8	69.8	71.9	75.0	68.2	69.2	71.3	74.4	66.4	67.4	69.5	72.6	63.3	64.3	66.4	69.5	59.5	60.5	62.6	65.7	56.0	57.0	59.1	62.2
		S/T	0.81	0.74	0.63	0.5	0.81	0.75	0.64	0.5	0.84	0.78	0.66	0.5	0.87	0.81	0.68	0.6	0.92	0.85	0.72	0.6	1.00	0.94	0.80	0.6
		ΔT	28.02	26.26	22.98	19.6	27.97	26.21	22.93	19.5	28.22	26.46	23.18	19.8	27.95	26.20	22.91	19.5	27.72	25.96	22.68	19.3	28.31	27.06	23.78	20.4
		kW	4.32	4.31	4.31	4.3	4.82	4.81	4.81	4.8	5.38	5.37	5.36	5.4	5.98	5.98	5.97	6.0	6.65	6.65	6.64	6.7	7.45	7.44	7.43	7.5
		Amps	14.97	14.95	14.92	15.1	17.14	17.13	17.09	17.3	19.57	19.55	19.52	19.7	22.19	22.18	22.14	22.3	25.13	25.11	25.07	25.2	28.57	28.55	28.52	28.7
		Hi PR	267	268	270	275.0	310	311	313	317.4	354	355	357	361.9	402	403	405	409.8	454	455	457	461.4	509	510	512	516.5
		Lo PR	127	128	131	136.9	128	136	139	144.7	127	143	146	151.5	127	149	152	157.3	128	152	157	162.9	147	151	159	168.7
	2380	MBh	70.5	71.5	73.5	76.7	69.9	70.8	72.9	76.1	68.1	69.0	71.1	74.3	65.0	65.9	**68.0**	71.2	61.2	62.1	64.2	67.4	57.7	58.7	60.7	63.9
		S/T	0.95	0.88	0.74	0.6	0.96	0.88	0.74	0.6	1.00	0.92	0.77	0.6	1.00	0.95	**0.79**	0.6	1.00	1.00	0.83	0.7	1.00	1.00	0.92	0.7
		ΔT	25.70	23.94	20.66	17.3	25.65	23.89	20.61	17.2	25.90	24.14	20.86	17.5	24.81	23.87	**20.59**	17.2	23.36	23.64	20.36	17.0	22.04	22.41	21.46	18.1
		kW	4.37	4.37	4.36	4.4	4.87	4.87	4.86	4.9	5.43	5.43	5.42	5.5	6.04	6.03	**6.02**	6.1	6.71	6.71	6.70	6.7	7.50	7.50	7.49	7.5
		Amps	15.22	15.20	15.16	15.3	17.39	17.37	17.34	17.5	19.82	19.80	19.76	19.9	22.44	22.42	**22.39**	22.6	25.37	25.36	25.32	25.5	28.82	28.80	28.76	28.9
		Hi PR	272	273	275	279.7	314	316	317	322.1	359	360	362	366.6	407	408	**410**	414.5	458	459	461	466.1	513	515	516	521.2
		Lo PR	128	132	135	140.5	128	140	143	148.3	128	146	150	155.1	127	152	**155**	160.8	156	153	161	166.5	163	164	166	173.6
	2700	MBh	71.7	72.6	74.7	77.9	71.1	72.0	74.1	77.3	69.2	70.2	72.3	75.4	66.1	67.1	69.2	72.3	62.3	63.3	65.4	68.5	58.9	59.8	61.9	65.1
		S/T	1.00	0.94	0.78	0.6	1.00	0.95	0.79	0.6	1.00	0.98	0.82	0.6	1.00	1.00	0.84	0.7	1.00	1.00	0.88	0.7	1.00	1.00	0.98	0.8
		ΔT	24.13	22.98	19.70	16.3	23.92	22.93	19.65	16.3	23.32	23.18	19.90	16.5	22.27	22.60	19.64	16.2	20.99	21.32	19.40	16.0	19.82	20.15	20.50	17.1
		kW	4.40	4.39	4.39	4.4	4.90	4.89	4.89	4.9	5.46	5.45	5.44	5.5	6.06	6.06	6.05	6.1	6.73	6.73	6.72	6.8	7.53	7.52	7.51	7.6
		Amps	15.32	15.30	15.26	15.4	17.49	17.47	17.44	17.6	19.92	19.90	19.86	20.0	22.54	22.53	22.49	22.7	25.48	25.46	25.42	25.6	28.92	28.90	28.86	29.0
		Hi PR	274	275	277	282.1	317	318	320	324.5	361	362	364	369.0	409	410	412	416.8	461	462	464	468.5	516	517	519	523.5
		Lo PR	132	134	137	142.8	140	142	145	150.5	147	149	152	157.3	153	154	158	163.1	158	160	163	168.7	166	167	169	175.8
85	1800	MBh	70.0	71.0	73.1	76.2	69.4	70.4	72.4	75.6	67.6	68.6	70.6	73.8	64.5	65.5	67.5	70.7	60.7	61.7	63.7	66.9	57.2	58.2	60.3	63.4
		S/T	0.89	0.83	0.72	0.6	0.90	0.83	0.72	0.6	0.93	0.86	0.75	0.6	0.96	0.90	0.77	0.6	1.00	0.94	0.81	0.7	1.00	1.00	0.89	0.7
		ΔT	31.47	29.71	26.43	23.0	31.42	29.66	26.38	23.0	31.67	29.91	26.63	23.2	31.40	29.65	26.37	23.0	30.65	29.41	26.13	22.7	28.90	29.39	27.23	23.8
		kW	4.33	4.32	4.32	4.4	4.83	4.82	4.82	4.9	5.39	5.38	5.37	5.4	5.99	5.99	5.98	6.0	6.66	6.66	6.65	6.7	7.46	7.45	7.44	7.5
		Amps	15.01	14.99	14.96	15.1	17.18	17.17	17.13	17.3	19.61	19.59	19.56	19.7	22.24	22.22	22.18	22.3	25.17	25.15	25.12	25.3	28.61	28.59	28.56	28.7
		Hi PR	269	270	272	276.3	311	312	314	318.7	355	357	358	363.2	403	404	406	411.0	455	456	458	462.7	510	511	513	517.7
		Lo PR	114	130	133	138.8	114	138	141	146.6	115	142	148	153.4	115	141	154	159.2	155	142	159	164.8	160	158	164	171.9
	2380	MBh	71.7	72.6	74.7	77.9	71.0	72.0	74.1	77.2	69.2	70.2	72.3	75.4	66.1	67.1	69.2	72.3	62.3	63.3	65.4	68.5	58.9	59.8	61.9	65.1
		S/T	1.00	0.99	0.84	0.7	1.00	0.99	0.85	0.7	1.00	1.00	0.88	0.7	1.00	1.00	0.91	0.7	1.00	1.00	0.95	0.8	1.00	1.00	1.00	0.9
		ΔT	27.37	27.39	24.11	20.7	27.13	27.34	24.06	20.7	26.44	26.82	24.31	20.9	25.26	25.63	24.04	20.6	23.81	24.18	23.81	20.4	22.48	22.85	23.64	21.5
		kW	4.38	4.38	4.37	4.4	4.88	4.88	4.87	4.9	5.44	5.44	5.43	5.5	6.05	6.04	6.03	6.1	6.72	6.72	6.71	6.7	7.51	7.51	7.50	7.5
		Amps	15.26	15.24	15.20	15.4	17.43	17.41	17.38	17.5	19.86	19.84	19.80	20.0	22.48	22.47	22.43	22.6	25.42	25.40	25.36	25.5	28.86	28.84	28.80	29.0
		Hi PR	273	274	276	281.0	316	317	319	323.4	360	361	363	367.9	408	409	411	415.7	460	461	463	467.3	515	516	518	522.4
		Lo PR	132	134	137	142.4	140	142	145	150.2	147	148	152	157.0	115	154	157	162.8	158	160	163	168.4	165	167	170	175.5
	2700	MBh	72.8	73.8	75.9	79.0	72.2	73.2	75.3	78.4	70.4	71.4	73.5	76.6	67.3	68.3	70.3	73.5	63.5	64.5	66.5	69.7	60.0	61.0	63.1	66.2
		S/T	1.00	1.00	0.91	0.7	1.00	1.00	0.91	0.7	1.00	1.00	0.94	0.8	1.00	1.00	0.97	0.8	1.00	1.00	1.00	0.8	1.00	1.00	1.00	0.9
		ΔT	24.52	24.85	23.15	19.8	24.32	24.65	23.10	19.7	23.71	24.04	23.35	20.0	22.66	22.99	23.09	19.7	21.38	21.71	22.41	19.5	20.21	20.54	21.24	20.6
		kW	4.41	4.40	4.40	4.4	4.91	4.90	4.90	4.9	5.47	5.46	5.45	5.5	6.07	6.07	6.06	6.1	6.74	6.74	6.73	6.8	7.54	7.53	7.52	7.6
		Amps	15.36	15.34	15.31	15.5	17.53	17.52	17.48	17.6	19.96	19.94	19.90	20.1	22.58	22.57	22.53	22.7	25.52	25.50	25.46	25.6	28.96	28.94	28.90	29.1
		Hi PR	276	277	279	283.3	318	319	321	325.8	362	364	366	370.2	410	412	413	418.1	462	463	465	469.7	517	518	520	524.8
		Lo PR	134	142	139	144.7	142	144	147	152.4	149	151	154	159.3	155	156	160	165.0	160	141	167	170.7	167	142	172	177.7

IDB: Entering Indoor Dry Bulb Temperature

Shaded area reflects AHRI (TVA) conditions

W = Total system power

High and low pressures are measured at the liquid and suction access fittings.

Amps: Unit amps (comp.+ evaporator + condenser fan motors)

Design Subcooling, 16 - 19 °F @ the liquid access fitting connection ARI 95 test conditions. Design Superheat 8 - 12°F @ the compressor suction access fitting connection.

Expanded Cooling Data

DSH072*D – 70%

			Outdoor Ambient Temperature																							
			65				75				85				95				105				115			
			Entering Indoor Wet Bulb Temperature																							
IDB	Airflow	ID WB	59	63	67	71	59	63	67	71	59	63	67	71	59	63	67	71	59	63	67	71	59	63	67	71
70	1260	MBh	49.2	49.9	51.4	-	48.8	49.5	51.0	-	47.5	48.2	49.7	-	45.2	45.9	47.4	-	42.5	43.2	44.7	-	40.0	40.7	42.2	-
		S/T	0.55	0.50	0.40	-	0.56	0.50	0.40	-	0.58	0.52	0.42	-	0.60	0.54	0.43	-	0.63	0.56	0.45	-	0.71	0.64	0.51	-
		ΔT	19.58	17.88	14.71	-	19.53	17.83	14.67	-	19.77	18.07	14.91	-	19.51	17.82	14.65	-	19.29	17.59	14.42	-	20.35	18.65	15.49	-
		kW	2.72	2.71	2.71	-	3.03	3.03	3.02	-	3.38	3.38	3.37	-	3.76	3.76	3.75	-	4.19	4.18	4.18	-	4.68	4.68	4.68	-
		Amps	9.42	9.41	9.38	-	10.78	10.77	10.75	-	12.31	12.30	12.28	-	13.96	13.95	13.93	-	15.81	15.79	15.77	-	17.97	17.96	17.94	-
		Hi PR	255	256	258	-	295	296	298	-	338	339	341	-	384	385	387	-	433	434	436	-	486	487	489	-
		Lo PR	130	131	135	-	138	139	143	-	143	146	150	-	144	148	155	-	145	149	157	-	141	146	154	-
	1470	MBh	50.4	51.1	52.6	-	50.0	50.7	52.1	-	48.7	49.4	50.8	-	46.4	47.1	48.6	-	43.7	44.4	45.9	-	41.2	41.9	43.4	-
		S/T	0.56	0.49	0.38	-	0.56	0.50	0.38	-	0.58	0.52	0.40	-	0.60	0.53	0.41	-	0.63	0.56	0.43	-	0.71	0.63	0.49	-
		ΔT	17.31	15.62	12.45	-	17.27	15.57	12.41	-	17.51	15.81	12.64	-	17.25	15.55	12.39	-	17.02	15.33	12.16	-	18.09	16.39	13.22	-
		kW	2.75	2.75	2.74	-	3.07	3.06	3.06	-	3.42	3.42	3.41	-	3.80	3.79	3.79	-	4.22	4.22	4.21	-	4.72	4.72	4.71	-
		Amps	9.57	9.56	9.54	-	10.94	10.93	10.91	-	12.47	12.46	12.43	-	14.12	14.11	14.08	-	15.96	15.95	15.93	-	18.13	18.12	18.09	-
		Hi PR	259	260	262	-	300	301	303	-	342	343	345	-	388	389	391	-	437	439	440	-	490	491	493	-
		Lo PR	133	135	138	-	141	143	146	-	148	150	153	-	150	155	159	-	150	155	164	-	148	152	161	-
	1890	MBh	51.2	51.9	53.4	-	50.8	51.5	53.0	-	49.5	50.2	51.7	-	47.2	48.0	49.4	-	44.5	45.2	46.7	-	42.0	42.7	44.2	-
		S/T	0.67	0.59	0.45	-	0.67	0.59	0.45	-	0.70	0.62	0.47	-	0.72	0.64	0.48	-	0.75	0.66	0.50	-	0.85	0.75	0.58	-
		ΔT	16.41	14.71	11.55	-	16.36	14.67	11.50	-	16.60	14.90	11.74	-	16.34	14.65	11.48	-	16.12	14.42	11.26	-	17.18	15.48	12.32	-
		kW	2.77	2.76	2.76	-	3.08	3.08	3.07	-	3.43	3.43	3.42	-	3.81	3.81	3.80	-	4.24	4.23	4.23	-	4.73	4.73	4.73	-
		Amps	9.64	9.62	9.60	-	11.00	10.99	10.97	-	12.53	12.52	12.49	-	14.18	14.17	14.15	-	16.02	16.01	15.99	-	18.19	18.18	18.16	-
		Hi PR	262	263	264	-	302	303	305	-	345	346	348	-	390	391	393	-	440	441	443	-	492	493	495	-
		Lo PR	136	137	141	-	144	145	148	-	149	152	155	-	150	157	161	-	149	157	167	-	150	154	164	-
75	1260	MBh	49.2	49.9	51.4	53.7	48.8	49.5	51.0	53.2	47.5	48.2	49.7	52.0	45.3	46.0	47.4	49.7	42.5	43.2	44.7	47.0	40.0	40.7	42.2	44.5
		S/T	0.66	0.60	0.50	0.4	0.66	0.60	0.50	0.4	0.69	0.63	0.52	0.4	0.71	0.65	0.54	0.4	0.75	0.68	0.56	0.4	0.83	0.76	0.63	0.5
		ΔT	23.31	21.61	18.44	15.2	23.26	21.56	18.40	15.1	23.50	21.80	18.64	15.4	23.24	21.55	18.38	15.1	23.02	21.32	18.15	14.9	24.08	22.38	19.21	15.9
		kW	2.71	2.71	2.71	2.7	3.03	3.03	3.02	3.0	3.38	3.38	3.37	3.4	3.76	3.76	3.75	3.8	4.18	4.18	4.18	4.2	4.68	4.68	4.67	4.7
		Amps	9.41	9.40	9.37	9.5	10.77	10.76	10.74	10.8	12.30	12.29	12.27	12.4	13.95	13.94	13.92	14.0	15.80	15.79	15.76	15.9	17.96	17.95	17.93	18.0
		Hi PR	255	256	258	262.4	296	297	298	303.0	338	339	341	345.5	384	385	387	391.2	433	434	436	440.6	486	487	489	493.2
		Lo PR	130	131	135	140.2	138	139	143	148.1	139	146	150	155.1	139	152	155	161.1	139	153	161	166.9	139	150	158	167.6
	1470	MBh	50.4	51.1	52.6	54.9	50.0	50.7	52.2	54.4	48.7	49.4	50.9	53.1	46.4	47.1	48.6	50.9	43.7	44.4	45.9	48.2	41.2	41.9	43.4	45.7
		S/T	0.67	0.61	0.50	0.4	0.68	0.62	0.50	0.4	0.71	0.64	0.52	0.4	0.73	0.66	0.54	0.4	0.77	0.69	0.56	0.4	0.86	0.78	0.63	0.5
		ΔT	21.04	19.35	16.18	12.9	21.00	19.30	16.13	12.9	21.24	19.54	16.37	13.1	20.98	19.28	16.12	12.8	20.75	19.06	15.89	12.6	21.81	20.12	16.95	13.7
		kW	2.75	2.75	2.74	2.8	3.06	3.06	3.06	3.1	3.42	3.41	3.41	3.4	3.80	3.79	3.79	3.8	4.22	4.22	4.21	4.2	4.72	4.72	4.71	4.7
		Amps	9.56	9.55	9.53	9.6	10.93	10.92	10.90	11.0	12.46	12.45	12.42	12.5	14.11	14.10	14.07	14.2	15.95	15.94	15.92	16.0	18.12	18.11	18.08	18.2
		Hi PR	260	261	262	266.9	300	301	303	307.5	343	344	346	350.0	388	389	391	395.8	438	439	441	445.1	490	491	493	497.8
		Lo PR	133	135	138	143.9	139	143	146	151.9	139	150	153	158.9	139	156	159	164.8	139	159	165	170.6	139	156	164	174.0
	1890	MBh	51.3	52.0	53.4	55.7	50.8	51.5	53.0	55.3	49.5	50.2	51.7	54.0	47.3	48.0	49.5	51.7	44.5	45.2	46.7	49.0	42.1	42.8	44.2	46.5
		S/T	0.82	0.74	0.59	0.4	0.82	0.74	0.60	0.4	0.85	0.77	0.62	0.5	0.88	0.80	0.64	0.5	0.93	0.83	0.67	0.5	1.00	0.93	0.75	0.6
		ΔT	20.14	18.44	15.27	12.0	20.09	18.40	15.23	11.9	20.33	18.63	15.47	12.2	20.07	18.38	15.21	11.9	19.85	18.15	14.98	11.7	20.23	19.21	16.05	12.8
		kW	2.76	2.76	2.76	2.8	3.08	3.08	3.07	3.1	3.43	3.43	3.42	3.4	3.81	3.81	3.80	3.8	4.23	4.23	4.23	4.3	4.73	4.73	4.72	4.7
		Amps	9.63	9.62	9.59	9.7	10.99	10.98	10.96	11.1	12.52	12.51	12.49	12.6	14.17	14.16	14.14	14.2	16.02	16.01	15.98	16.1	18.18	18.17	18.15	18.3
		Hi PR	262	263	265	269.1	302	303	305	309.7	345	346	348	352.2	391	392	394	398.0	440	441	443	447.3	493	494	496	500.0
		Lo PR	136	137	141	146.1	140	145	149	154.1	139	152	156	161.1	140	158	161	167.0	139	161	167	172.8	156	158	167	177.5

IDB: Entering Indoor Dry Bulb Temperature

Shaded area reflects AHRI (TVA) conditions

W = Total system power

High and low pressures are measured at the liquid and suction access fittings.

Amps: Unit amps (comp.+ evaporator + condenser fan motors)

Design Subcooling, 16 - 19 °F @ the liquid access fitting connection ARI 95 test conditions. Design Superheat 8 - 12°F @ the compressor suction access fitting connection.

			Outdoor Ambient Temperature																							
			65				75				85				95				105				115			
			Entering Indoor Wet Bulb Temperature																							
IDB	Airflow	ID WB	59	63	67	71	59	63	67	71	59	63	67	71	59	63	67	71	59	63	67	71	59	63	67	71
80	1260	MBh	49.5	50.2	51.7	54.0	49.0	49.8	51.2	53.5	47.7	48.5	49.9	52.2	45.5	46.2	47.7	50.0	42.8	43.5	45.0	47.2	40.3	41.0	42.5	44.7
		S/T	0.76	0.70	0.60	0.5	0.76	0.71	0.60	0.5	0.79	0.73	0.62	0.5	0.82	0.76	0.64	0.5	0.87	0.80	0.68	0.5	0.96	0.88	0.75	0.6
		ΔT	27.06	25.36	22.20	18.9	27.01	25.32	22.15	18.9	27.25	25.56	22.39	19.1	27.00	25.30	22.13	18.9	26.77	25.07	21.91	18.6	27.83	26.14	22.97	19.7
		kW	2.72	2.71	2.71	2.7	3.03	3.03	3.02	3.0	3.38	3.38	3.37	3.4	3.76	3.76	3.75	3.8	4.19	4.18	4.18	4.2	4.68	4.68	4.68	4.7
		Amps	9.41	9.40	9.38	9.5	10.78	10.77	10.75	10.9	12.31	12.30	12.27	12.4	13.96	13.95	13.92	14.0	15.80	15.79	15.77	15.9	17.97	17.96	17.93	18.0
		Hi PR	255	257	258	262.9	296	297	299	303.4	339	340	341	345.9	384	385	387	391.7	434	435	437	441.0	486	487	489	493.7
		Lo PR	128	132	135	140.7	128	140	143	148.7	127	147	150	155.7	128	151	156	161.6	127	152	162	167.4	128	151	161	170.8
	1470	MBh	50.7	51.4	52.9	55.1	50.2	50.9	52.4	54.7	48.9	49.6	51.1	53.4	46.7	47.4	**48.9**	51.2	44.0	44.7	46.2	48.4	41.5	42.2	43.7	45.9
		S/T	0.79	0.73	0.61	0.5	0.80	0.73	0.61	0.5	0.83	0.76	0.64	0.5	0.86	0.79	**0.66**	0.5	0.90	0.83	0.69	0.5	1.00	0.92	0.77	0.6
		ΔT	24.80	23.10	19.94	16.7	24.75	23.06	19.89	16.6	24.99	23.29	20.13	16.8	24.73	23.04	**19.87**	16.6	24.51	22.81	19.64	16.4	25.57	23.87	20.71	17.4
		kW	2.75	2.75	2.74	2.8	3.07	3.06	3.06	3.1	3.42	3.41	3.41	3.4	3.80	3.79	**3.79**	3.8	4.22	4.22	4.21	4.2	4.72	4.72	4.71	4.7
		Amps	9.57	9.56	9.54	9.6	10.94	10.93	10.90	11.0	12.46	12.45	12.43	12.5	14.12	14.11	**14.08**	14.2	15.96	15.95	15.93	16.0	18.13	18.11	18.09	18.2
		Hi PR	260	261	263	267.4	301	302	303	308.0	343	344	346	350.5	389	390	**392**	396.2	438	439	441	445.6	491	492	494	498.2
		Lo PR	127	136	139	144.4	128	143	147	152.4	128	150	154	159.4	127	153	**160**	165.4	128	152	166	171.2	128	153	169	178.4
	1890	MBh	51.5	52.2	53.7	56.0	51.1	51.8	53.3	55.5	49.8	50.5	52.0	54.2	47.5	48.2	49.7	52.0	44.8	45.5	47.0	49.3	42.3	43.0	44.5	46.8
		S/T	0.96	0.88	0.74	0.6	0.97	0.89	0.74	0.6	1.00	0.92	0.77	0.6	1.00	0.95	0.79	0.6	1.00	1.00	0.83	0.7	1.00	1.00	0.93	0.7
		ΔT	23.89	22.20	19.03	15.7	23.85	22.15	18.98	15.7	23.94	22.39	19.22	15.9	22.86	22.13	18.97	15.7	21.55	21.89	18.74	15.5	20.35	20.69	19.80	16.5
		kW	2.77	2.76	2.76	2.8	3.08	3.08	3.07	3.1	3.43	3.43	3.42	3.4	3.81	3.81	3.80	3.8	4.24	4.23	4.23	4.3	4.73	4.73	4.73	4.7
		Amps	9.63	9.62	9.60	9.7	11.00	10.99	10.97	11.1	12.53	12.52	12.49	12.6	14.18	14.17	14.14	14.2	16.02	16.01	15.99	16.1	18.19	18.18	18.15	18.3
		Hi PR	262	263	265	269.6	303	304	306	310.2	345	346	348	352.7	391	392	394	398.5	440	442	443	447.8	493	494	496	500.5
		Lo PR	127	138	141	146.7	127	146	149	154.7	151	151	156	161.7	157	152	162	167.6	163	164	168	173.4	169	169	171	180.7
85	1260	MBh	50.3	51.0	52.5	54.8	49.9	50.6	52.1	54.3	48.6	49.3	50.8	53.0	46.4	47.1	48.5	50.8	43.6	44.3	45.8	48.1	41.1	41.8	43.3	45.6
		S/T	0.84	0.78	0.67	0.6	0.84	0.78	0.68	0.6	0.87	0.81	0.70	0.6	0.91	0.84	0.73	0.6	0.96	0.89	0.76	0.6	1.00	0.98	0.84	0.7
		ΔT	30.39	28.69	25.53	22.2	30.34	28.65	25.48	22.2	30.58	28.89	25.72	22.4	30.33	28.63	25.46	22.2	30.10	28.40	25.24	22.0	29.67	29.47	26.30	23.0
		kW	2.72	2.72	2.71	2.7	3.04	3.03	3.03	3.1	3.39	3.38	3.38	3.4	3.77	3.76	3.76	3.8	4.19	4.19	4.18	4.2	4.69	4.69	4.68	4.7
		Amps	9.44	9.43	9.41	9.5	10.81	10.80	10.77	10.9	12.33	12.32	12.30	12.4	13.99	13.97	13.95	14.1	15.83	15.82	15.80	15.9	17.99	17.98	17.96	18.1
		Hi PR	257	258	260	264.1	297	298	300	304.6	340	341	343	347.1	386	387	388	392.9	435	436	438	442.3	488	489	490	494.9
		Lo PR	115	134	137	142.7	114	142	145	150.7	115	142	152	157.7	115	142	158	163.6	115	142	164	169.4	157	142	166	176.7
	1470	MBh	51.5	52.2	53.7	56.0	51.1	51.8	53.3	55.5	49.8	50.5	52.0	54.2	47.5	48.2	49.7	52.0	44.8	45.5	47.0	49.3	42.3	43.0	44.5	46.8
		S/T	0.88	0.82	0.70	0.6	0.89	0.82	0.70	0.6	0.92	0.85	0.73	0.6	0.95	0.88	0.75	0.6	1.00	0.93	0.79	0.6	1.00	1.00	0.87	0.7
		ΔT	28.13	26.43	23.26	20.0	28.08	26.39	23.22	19.9	28.32	26.62	23.46	20.2	28.06	26.37	23.20	19.9	27.71	26.14	22.97	19.7	26.17	26.60	24.04	20.8
		kW	2.76	2.76	2.75	2.8	3.07	3.07	3.06	3.1	3.42	3.42	3.42	3.4	3.80	3.80	3.80	3.8	4.23	4.22	4.22	4.2	4.73	4.72	4.72	4.7
		Amps	9.60	9.59	9.56	9.7	10.96	10.95	10.93	11.0	12.49	12.48	12.46	12.6	14.14	14.13	14.11	14.2	15.99	15.98	15.95	16.1	18.15	18.14	18.12	18.2
		Hi PR	261	262	264	268.6	302	303	305	309.2	344	345	347	351.7	390	391	393	397.4	439	440	442	446.8	492	493	495	499.4
		Lo PR	115	137	141	146.4	115	142	149	154.4	114	142	156	161.4	115	141	162	167.3	163	142	166	173.1	167	166	166	180.4
	1890	MBh	52.4	53.1	54.5	56.8	51.9	52.6	54.1	56.4	50.6	51.3	52.8	55.1	48.4	49.1	50.6	52.8	45.6	46.3	47.8	50.1	43.1	43.9	45.3	47.6
		S/T	1.00	1.00	0.85	0.7	1.00	1.00	0.86	0.7	1.00	1.00	0.89	0.7	1.00	1.00	0.92	0.7	1.00	1.00	0.96	0.8	1.00	1.00	1.00	0.9
		ΔT	25.18	25.52	22.36	19.1	24.97	25.30	22.31	19.0	24.34	24.68	22.55	19.3	23.27	23.61	22.30	19.0	21.95	22.29	22.07	18.8	20.75	21.09	21.81	19.8
		kW	2.77	2.77	2.76	2.8	3.09	3.08	3.08	3.1	3.44	3.44	3.43	3.5	3.82	3.81	3.81	3.8	4.24	4.24	4.23	4.3	4.74	4.74	4.73	4.8
		Amps	9.66	9.65	9.63	9.7	11.03	11.02	10.99	11.1	12.55	12.54	12.52	12.6	14.20	14.19	14.17	14.3	16.05	16.04	16.02	16.1	18.21	18.20	18.18	18.3
		Hi PR	263	265	266	270.8	304	305	307	311.4	346	348	349	353.9	392	393	395	399.7	442	443	445	449.0	494	495	497	501.7
		Lo PR	138	144	143	148.7	146	148	151	156.7	153	155	158	163.7	159	161	164	169.6	165	166	166	175.4	172	174	177	182.7

IDB: Entering Indoor Dry Bulb Temperature

Shaded area reflects AHRI (TVA) conditions

W = Total system power

High and low pressures are measured at the liquid and suction access fittings.

Amps: Unit amps (comp.+ evaporator + condenser fan motors)

Design Subcooling, 16 - 19 °F @ the liquid access fitting connection ARI 95 test conditions. Design Superheat 8 - 12°F @ the compressor suction access fitting connection.

Electrical Heater Data

ELECTRIC HEATERS						
UNIT	HEATER KIT MODEL NUMBER	KW	Stages	HEATING MINIMUM AIRFLOW	COOLING MIMINUM AIRFLOW	MAXIMUM CFM
3 TON HP STD STATIC	EH*D-*S05A	5	1	1325	900	1500
	EH*D-*S10A	10				
	EH*D-*S15A	15				
3 TON HP HIGH STATIC	EH*D-*S05A	5				
	EH*D-*S10A	10				
	EH*D-*S15A	15				
4 TON HP STD STATIC	EH*D-*S05A	5		1600	1200	2000
	EH*D-*S10A	10				
	EH*D-*S15A	15				
	EH*D-*S20A	20	2			
4 TON HP HIGH STATIC	EH*D-*S05A	5	1			
	EH*D-*S10A	10				
	EH*D-*S15A	15				
	EH*D-*S20A	20	2			
5 TON HP STD STATIC	EH*D-*S05A	5	1	1900	1500	2500
	EH*D-*S10A	10				
	EH*D-*S15A	15				
	EH*D-*S20A	20	2			
5 TON HP HIGH STATIC	EH*D-*S05A	5	1			
	EH*D-*S10A	10				
	EH*D-*S15A	15				
	EH*D-*S20A	20	2			
6 TON HP STD STATIC	EH*D-*S05A	5	1	2100	1800	3000
	EH*D-*S10A	10				
	EH*D-*S15A	15				
	EH*D-*S20A	20	2			
	EH*D-*S30A	30				
6 TON HP HIGH STATIC	EH*D-*S05A	5	1	2175		
	EH*D-*S10A	10				
	EH*D-*S15A	15				
	EH*D-*S20A	20	2			
	EH*D-*S30B	30				

HEATER KIT MODEL NUMBER NOMENCLATURE

E	X	D	-	3	S	15	A
1,2	3	4	-	5	6	7,8	9

Electric Heater

Heater Type

X Staged
S SCR (modulating)

Drive System

D Direct Drive

Voltage

1	208-230/1/60	Single phase 60 Hz
3	208-230/3/60	Three phase 60 Hz
4	460/3/60	Three phase 60 Hz
7	575/3/60	Three phase 60 Hz

Chassis

S Small
M Medium
L Large

Kilowatt

5	05 KW	18	18 KW
10	10 KW	20	20 KW
15	15 KW	30	30 KW

Limit Configuratoin

None **Line Break**

A	Pilot Duty Config 1	**C**	Pilot Duty Config 3
B	Pilot Duty Config 2	**D**	Pilot Duty Config 4

DSH0361D / DSH0363D DOWNSHOT

TAP	STATIC	AIRFLOW (CFM)	RPM	WATTS	BHP
T1 *	0.1	1111	571	136	0.14
	0.2	1025	604	146	0.15
	0.3	962	646	154	0.16
	0.4	897	693	164	0.17
	0.5	825	736	173	0.18
	0.6	768	776	181	0.19
	0.7	707	818	189	0.20
	0.8	645	851	196	0.21
T2	0.1	1375	660	230	0.24
	0.2	1310	695	241	0.25
	0.3	1255	730	251	0.27
	0.4	1200	765	262	0.28
	0.5	1145	805	274	0.29
	0.6	1095	840	283	0.31
	0.7	1045	870	293	0.32
	0.8	990	910	304	0.33
T3	0.1	-	-	-	-
	0.2	1473	750	308	0.33
	0.3	1423	778	318	0.35
	0.4	1371	811	330	0.36
	0.5	1325	844	343	0.37
	0.6	1281	875	354	0.39
	0.7	1235	906	365	0.40
	0.8	1181	944	378	0.42
T4	0.1	-	-	-	-
	0.2	1489	755	316	0.34
	0.3	1440	783	326	0.35
	0.4	1388	816	338	0.37
	0.5	1343	848	351	0.38
	0.6	1299	879	361	0.40
	0.7	1253	910	373	0.41
	0.8	1200	948	386	0.43
T5	0.1	1655	757	359	0.39
	0.2	1602	792	371	0.41
	0.3	1553	818	382	0.42
	0.4	1504	848	395	0.43
	0.5	1464	877	407	0.45
	0.6	1422	906	419	0.46
	0.7	1377	937	432	0.48
	0.8	1325	974	446	0.50

DSH0361D / DSH0363D HORIZONTAL

TAP	STATIC	AIRFLOW (CFM)	RPM	WATTS	BHP
T1 *	0.1	1158	534	57	0.13
	0.2	1100	573	64	0.14
	0.3	1019	615	66	0.15
	0.4	947	667	71	0.16
	0.5	870	713	76	0.17
	0.6	815	754	80	0.18
	0.7	760	791	83	0.19
	0.8	700	829	87	0.20
T2	0.1	1440	620	99	0.23
	0.2	1380	660	106	0.24
	0.3	1325	695	110	0.25
	0.4	1270	730	115	0.27
	0.5	1215	765	120	0.28
	0.6	1160	805	125	0.29
	0.7	1100	845	131	0.31
	0.8	1045	885	137	0.32
T3	0.1	-	-	-	-
	0.2	-	-	-	-
	0.3	1500	739	141	0.33
	0.4	1453	770	146	0.34
	0.5	1405	802	151	0.36
	0.6	1353	837	157	0.37
	0.7	1297	877	164	0.39
	0.8	1242	915	171	0.41
T4	0.1	-	-	-	-
	0.2	-	-	-	-
	0.3	1500	744	145	0.34
	0.4	1471	774	149	0.35
	0.5	1424	806	155	0.36
	0.6	1372	841	160	0.38
	0.7	1316	880	168	0.40
	0.8	1261	918	174	0.41
T5	0.1	1734	710	157	0.36
	0.2	1679	746	163	0.38
	0.3	1638	777	170	0.40
	0.4	1593	804	175	0.41
	0.5	1549	833	181	0.43
	0.6	1501	865	187	0.44
	0.7	1447	902	194	0.46
	0.8	1396	938	201	0.48

* In DSH0361D / DSH0363D, DSH0364D / DSH0367D, DSH0481D / DSH0483D, DSH0484D / DSH0487D, DSH0601D / DSH0603D, AND DSH0604D / DSH0607D DOWNSHOT & HORIZONTAL Tables, T1 values are for fan mode only

** In DSH0723D / DSH0724D / DSH0727D DOWNSHOT & HORIZONTAL Tables, T1 AND T2 values are for part load only

DSH0364D / DSH0367D DOWNSHOT

TAP	STATIC	AIRFLOW (CFM)	RPM	WATTS	BHP
T1 *	0.1	1093	535	86	0.12
	0.2	1028	583	94	0.13
	0.3	962	630	103	0.14
	0.4	894	678	107	0.15
	0.5	826	725	111	0.16
	0.6	764	767	120	0.17
	0.7	697	808	125	0.18
	0.8	631	849	129	0.18
T2	0.1	1500	695	176	0.28
	0.2	1455	725	183	0.30
	0.3	1410	755	189	0.31
	0.4	1355	790	197	0.32
	0.5	1300	825	205	0.34
	0.6	1245	865	212	0.35
	0.7	1190	900	219	0.37
	0.8	1135	935	226	0.38
T3	0.1	1500	702	182	0.29
	0.2	1477	732	189	0.31
	0.3	1431	761	195	0.32
	0.4	1378	797	203	0.33
	0.5	1325	832	211	0.35
	0.6	1272	868	218	0.36
	0.7	1217	903	225	0.38
	0.8	1162	938	232	0.39
T4	0.1	-	-	-	-
	0.2	-	-	-	-
	0.3	1464	771	204	0.33
	0.4	1413	806	212	0.35
	0.5	1361	841	220	0.36
	0.6	1309	876	227	0.38
	0.7	1254	911	234	0.39
	0.8	1200	945	242	0.41
T5	0.1	1658	755	223	0.37
	0.2	1617	780	230	0.38
	0.3	1575	804	236	0.39
	0.4	1527	836	244	0.41
	0.5	1478	869	253	0.42
	0.6	1428	902	260	0.44
	0.7	1377	935	267	0.46
	0.8	1325	968	275	0.47

DSH0364D / DSH0367D HORIZONTAL

TAP	STATIC	AIRFLOW (CFM)	RPM	WATTS	BHP
T1 *	0.1	1140	505	76	0.11
	0.2	1084	545	82	0.12
	0.3	1028	584	87	0.13
	0.4	956	635	96	0.14
	0.5	884	685	106	0.15
	0.6	812	736	110	0.16
	0.7	741	783	115	0.17
	0.8	669	829	120	0.18
T2	0.1	-	-	-	-
	0.2	-	-	-	-
	0.3	1480	705	176	0.29
	0.4	1430	740	184	0.30
	0.5	1385	770	191	0.31
	0.6	1330	810	200	0.33
	0.7	1275	845	208	0.35
	0.8	1220	885	217	0.36
T3	0.1	-	-	-	-
	0.2	-	-	-	-
	0.3	1500	712	182	0.30
	0.4	1457	745	190	0.31
	0.5	1409	777	197	0.32
	0.6	1356	815	206	0.34
	0.7	1301	851	214	0.36
	0.8	1247	888	223	0.37
T4	0.1	1629	665	180	0.29
	0.2	1584	694	185	0.30
	0.3	1539	722	191	0.31
	0.4	1493	753	198	0.33
	0.5	1447	785	206	0.34
	0.6	1395	821	215	0.36
	0.7	1342	857	223	0.37
	0.8	1288	893	232	0.39
T5	0.1	1739	701	210	0.34
	0.2	1696	727	216	0.35
	0.3	1652	754	222	0.37
	0.4	1611	782	229	0.38
	0.5	1569	810	236	0.39
	0.6	1522	843	246	0.41
	0.7	1472	876	255	0.43
	0.8	1422	910	264	0.44

* In DSH0361D / DSH0363D, DSH0364D / DSH0367D, DSH0481D / DSH0483D, DSH0484D / DSH0487D, DSH0601D / DSH0603D, AND DSH0604D / DSH0607D DOWNSHOT & HORIZONTAL Tables, T1 values are for fan mode only

** In DSH0723D / DSH0724D / DSH0727D DOWNSHOT & HORIZONTAL Tables, T1 AND T2 values are for part load only

DSH0481D / DSH0483D DOWNSHOT

TAP	STATIC	AIRFLOW (CFM)	RPM	WATTS	BHP
T1 *	0.1	1315	613	191	0.22
	0.2	1258	649	201	0.23
	0.3	1202	689	212	0.24
	0.4	1148	728	222	0.26
	0.5	1101	767	232	0.27
	0.6	1028	810	243	0.28
	0.7	969	848	253	0.30
	0.8	915	883	262	0.31
T2	0.1	1680	740	346	0.41
	0.2	1635	770	356	0.43
	0.3	1590	800	368	0.44
	0.4	1540	830	381	0.46
	0.5	1505	860	394	0.47
	0.6	1450	890	406	0.49
	0.7	1405	925	420	0.52
	0.8	1360	955	432	0.53
T3	0.1	1769	772	393	0.47
	0.2	1726	796	403	0.48
	0.3	1682	824	416	0.50
	0.4	1638	854	429	0.52
	0.5	1600	883	442	0.54
	0.6	1552	914	456	0.56
	0.7	1507	944	469	0.57
	0.8	1462	974	482	0.59
T4	0.1	1811	787	417	0.50
	0.2	1770	811	427	0.51
	0.3	1727	838	440	0.53
	0.4	1683	867	454	0.55
	0.5	1646	895	467	0.57
	0.6	1600	924	481	0.59
	0.7	1556	954	495	0.61
	0.8	1512	983	508	0.62
T5	0.1	1886	815	463	0.56
	0.2	1848	836	472	0.57
	0.3	1807	861	486	0.59
	0.4	1764	889	500	0.61
	0.5	1728	916	513	0.63
	0.6	1684	944	528	0.65
	0.7	1642	973	542	0.67
	0.8	1600	1001	556	0.69

DSH0481D / DSH0483D HORIZONTAL

TAP	STATIC	AIRFLOW (CFM)	RPM	WATTS	BHP
T1 *	0.1	1343	591	185	0.21
	0.2	1282	631	196	0.22
	0.3	1224	670	207	0.24
	0.4	1171	713	218	0.25
	0.5	1110	755	228	0.27
	0.6	1045	799	240	0.28
	0.7	973	839	251	0.30
	0.8	917	876	261	0.31
T2	0.1	1720	710	333	0.39
	0.2	1665	745	347	0.41
	0.3	1615	770	362	0.43
	0.4	1565	810	373	0.44
	0.5	1520	845	386	0.46
	0.6	1475	875	399	0.49
	0.7	1430	910	412	0.51
	0.8	1380	940	425	0.52
T3	0.1	1812	739	379	0.45
	0.2	1759	772	393	0.47
	0.3	1707	795	407	0.48
	0.4	1663	835	421	0.51
	0.5	1620	865	434	0.53
	0.6	1578	896	447	0.54
	0.7	1534	926	461	0.56
	0.8	1488	959	475	0.58
T4	0.1	1856	753	401	0.48
	0.2	1804	785	416	0.50
	0.3	1753	806	431	0.51
	0.4	1709	847	444	0.54
	0.5	1668	876	457	0.56
	0.6	1627	906	471	0.58
	0.7	1585	935	485	0.59
	0.8	1540	967	499	0.61
T5	0.1	1935	778	444	0.53
	0.2	1884	809	459	0.55
	0.3	1834	826	474	0.57
	0.4	1792	868	488	0.59
	0.5	1752	896	502	0.61
	0.6	1713	924	516	0.63
	0.7	1674	952	531	0.65
	0.8	1630	983	546	0.67

* In DSH0361D / DSH0363D, DSH0364D / DSH0367D, DSH0481D / DSH0483D, DSH0484D / DSH0487D, DSH0601D / DSH0603D, AND DSH0604D / DSH0607D DOWNSHOT & HORIZONTAL Tables, T1 values are for fan mode only

** In DSH0723D / DSH0724D / DSH0727D DOWNSHOT & HORIZONTAL Tables, T1 AND T2 values are for part load only

DSH0484D / DSH0487D DOWNSHOT

TAP	STATIC	AIRFLOW (CFM)	RPM	WATTS	BHP
T1 *	0.1	1344	605	121	0.20
	0.2	1265	651	128	0.21
	0.3	1216	694	136	0.23
	0.4	1158	734	143	0.24
	0.5	1100	775	150	0.25
	0.6	1038	814	156	0.27
	0.7	975	851	161	0.28
	0.8	910	888	168	0.29
T2	0.1	1660	705	190	0.33
	0.2	1590	740	200	0.35
	0.3	1550	780	208	0.36
	0.4	1500	810	217	0.38
	0.5	1455	850	226	0.39
	0.6	1400	880	234	0.41
	0.7	1335	915	242	0.43
	0.8	1300	950	249	0.44
T3	0.1	1795	755	234	0.41
	0.2	1738	786	243	0.42
	0.3	1693	818	252	0.44
	0.4	1647	851	262	0.46
	0.5	1600	884	271	0.48
	0.6	1553	916	281	0.49
	0.7	1494	947	289	0.51
	0.8	1459	979	297	0.53
T4	0.1	1837	770	248	0.43
	0.2	1785	800	258	0.45
	0.3	1738	831	267	0.47
	0.4	1692	863	277	0.49
	0.5	1646	895	287	0.51
	0.6	1600	927	296	0.52
	0.7	1546	957	305	0.54
	0.8	1509	989	313	0.56
T5	0.1	1916	798	278	0.49
	0.2	1873	826	288	0.50
	0.3	1822	856	296	0.52
	0.4	1777	886	307	0.54
	0.5	1732	918	318	0.56
	0.6	1687	948	327	0.58
	0.7	1642	978	337	0.60
	0.8	1600	1008	345	0.62

DSH0484D / DSH0487D HORIZONTAL

TAP	STATIC	AIRFLOW (CFM)	RPM	WATTS	BHP
T1 *	0.1	1379	593	107	0.19
	0.2	1336	627	115	0.21
	0.3	1285	666	122	0.22
	0.4	1232	707	128	0.23
	0.5	1177	747	136	0.24
	0.6	1104	795	145	0.26
	0.7	1043	837	149	0.27
	0.8	987	874	161	0.29
T2	0.1	1680	685	179	0.32
	0.2	1650	710	187	0.33
	0.3	1605	745	194	0.35
	0.4	1560	775	204	0.36
	0.5	1515	810	212	0.37
	0.6	1465	845	220	0.40
	0.7	1415	880	229	0.41
	0.8	1365	915	237	0.42
T3	0.1	1823	729	222	0.39
	0.2	1792	753	230	0.41
	0.3	1753	782	237	0.42
	0.4	1712	811	249	0.44
	0.5	1670	843	256	0.46
	0.6	1626	875	264	0.47
	0.7	1583	906	275	0.49
	0.8	1535	939	282	0.51
T4	0.1	1868	744	237	0.42
	0.2	1838	767	245	0.43
	0.3	1800	794	252	0.45
	0.4	1761	823	263	0.46
	0.5	1719	853	271	0.48
	0.6	1678	884	279	0.50
	0.7	1636	915	291	0.52
	0.8	1589	947	298	0.53
T5	0.1	1954	771	266	0.47
	0.2	1925	793	274	0.48
	0.3	1889	819	282	0.50
	0.4	1851	846	293	0.52
	0.5	1812	874	301	0.53
	0.6	1775	902	309	0.55
	0.7	1735	932	322	0.57
	0.8	1690	963	328	0.59

* In DSH0361D / DSH0363D, DSH0364D / DSH0367D, DSH0481D / DSH0483D, DSH0484D / DSH0487D, DSH0601D / DSH0603D, AND DSH0604D / DSH0607D DOWNSHOT & HORIZONTAL Tables, T1 values are for fan mode only

** In DSH0723D / DSH0724D / DSH0727D DOWNSHOT & HORIZONTAL Tables, T1 AND T2 values are for part load only

DSH0601D / DSH0603D DOWNSHOT

TAP	STATIC	AIRFLOW (CFM)	RPM	WATTS	BHP
T1 *	0.1	1551	695	285	0.33
	0.2	1502	725	296	0.35
	0.3	1452	758	308	0.36
	0.4	1403	792	319	0.38
	0.5	1361	826	331	0.39
	0.6	1303	862	343	0.41
	0.7	1252	896	355	0.43
	0.8	1203	928	366	0.44
T2	0.1	1895	820	466	0.56
	0.2	1860	840	476	0.58
	0.3	1815	865	489	0.59
	0.4	1775	890	503	0.61
	0.5	1740	920	517	0.63
	0.6	1695	945	531	0.65
	0.7	1655	975	546	0.67
	0.8	1610	1005	560	0.69
T3	0.1	2045	873	573	0.70
	0.2	2013	891	583	0.71
	0.3	1975	913	596	0.73
	0.4	1935	938	611	0.75
	0.5	1900	962	625	0.77
	0.6	1860	989	641	0.79
	0.7	1821	1016	657	0.81
	0.8	1782	1042	672	0.83
T4	0.1	2174	923	683	0.84
	0.2	2148	938	692	0.85
	0.3	2113	957	705	0.87
	0.4	2074	981	721	0.89
	0.5	2039	1003	736	0.91
	0.6	2000	1029	753	0.93
	0.7	1962	1055	770	0.96
	0.8	1926	1080	786	0.98
T5	0.1	2243	950	751	0.92
	0.2	2220	964	761	0.93
	0.3	2187	982	773	0.95
	0.4	2148	1005	789	0.97
	0.5	2112	1026	804	0.99
	0.6	2072	1053	822	1.02
	0.7	2035	1078	840	1.05
	0.8	2000	1102	857	1.07

DSH0601D / DSH0603D HORIZONTAL

TAP	STATIC	AIRFLOW (CFM)	RPM	WATTS	BHP
T1 *	0.1	1586	668	276	0.32
	0.2	1529	705	289	0.34
	0.3	1474	735	302	0.35
	0.4	1426	776	314	0.37
	0.5	1376	811	325	0.39
	0.6	1324	848	338	0.41
	0.7	1268	882	350	0.42
	0.8	1217	917	362	0.44
T2	0.1	1945	780	447	0.54
	0.2	1895	810	462	0.56
	0.3	1845	830	477	0.57
	0.4	1800	870	492	0.60
	0.5	1765	900	506	0.62
	0.6	1725	925	520	0.64
	0.7	1685	955	534	0.66
	0.8	1645	985	549	0.68
T3	0.1	2104	830	548	0.66
	0.2	2056	857	562	0.69
	0.3	2009	867	579	0.69
	0.4	1968	913	594	0.73
	0.5	1929	939	610	0.75
	0.6	1894	964	625	0.77
	0.7	1858	990	641	0.79
	0.8	1819	1019	657	0.81
T4	0.1	2244	873	651	0.79
	0.2	2198	897	665	0.81
	0.3	2154	900	682	0.82
	0.4	2113	950	699	0.86
	0.5	2073	977	717	0.89
	0.6	2038	1000	733	0.91
	0.7	2002	1026	749	0.93
	0.8	1966	1051	766	0.95
T5	0.1	2319	895	714	0.87
	0.2	2275	918	728	0.89
	0.3	2232	917	745	0.89
	0.4	2191	970	763	0.94
	0.5	2149	998	783	0.97
	0.6	2114	1021	799	0.99
	0.7	2076	1046	816	1.01
	0.8	2041	1070	833	1.04

* In DSH0361D / DSH0363D, DSH0364D / DSH0367D, DSH0481D / DSH0483D, DSH0484D / DSH0487D, DSH0601D / DSH0603D, AND DSH0604D / DSH0607D DOWNSHOT & HORIZONTAL Tables, T1 values are for fan mode only

** In DSH0723D / DSH0724D / DSH0727D DOWNSHOT & HORIZONTAL Tables, T1 AND T2 values are for part load only

DSH0604D / DSH0607D DOWNSHOT

TAP	STATIC	AIRFLOW (CFM)	RPM	WATTS	BHP
T1 *	0.1	1589	684	174	0.30
	0.2	1515	721	182	0.31
	0.3	1475	759	191	0.33
	0.4	1425	795	199	0.34
	0.5	1374	831	208	0.36
	0.6	1321	866	216	0.38
	0.7	1250	900	222	0.39
	0.8	1213	934	230	0.41
T2	0.1	1860	780	255	0.45
	0.2	1815	810	265	0.46
	0.3	1765	840	273	0.48
	0.4	1720	870	283	0.50
	0.5	1675	900	293	0.52
	0.6	1630	935	303	0.53
	0.7	1575	965	312	0.55
	0.8	1540	995	320	0.57
T3	0.1	2074	854	346	0.61
	0.2	2047	879	356	0.63
	0.3	1988	907	365	0.65
	0.4	1944	935	377	0.67
	0.5	1900	964	389	0.69
	0.6	1858	992	398	0.71
	0.7	1830	1020	409	0.73
	0.8	1777	1049	419	0.75
T4	0.1	2208	899	414	0.72
	0.2	2184	924	424	0.74
	0.3	2127	949	432	0.76
	0.4	2084	976	445	0.78
	0.5	2041	1003	458	0.81
	0.6	2000	1030	467	0.83
	0.7	1977	1057	479	0.85
	0.8	1920	1085	490	0.87
T5	0.1	2284	923	456	0.79
	0.2	2255	947	465	0.81
	0.3	2205	972	473	0.83
	0.4	2163	998	487	0.86
	0.5	2121	1025	501	0.88
	0.6	2080	1052	509	0.90
	0.7	2052	1078	521	0.92
	0.8	2000	1105	534	0.95

DSH0604D / DSH0607D HORIZONTAL

TAP	STATIC	AIRFLOW (CFM)	RPM	WATTS	BHP
T1 *	0.1	1612	664	162	0.29
	0.2	1576	692	169	0.30
	0.3	1531	725	176	0.31
	0.4	1485	760	186	0.33
	0.5	1437	795	194	0.35
	0.6	1380	834	202	0.36
	0.7	1397	870	210	0.38
	0.8	1277	906	219	0.39
T2	0.1	1895	750	243	0.43
	0.2	1865	775	251	0.45
	0.3	1830	800	258	0.46
	0.4	1790	830	270	0.47
	0.5	1750	860	278	0.49
	0.6	1710	890	286	0.51
	0.7	1735	920	298	0.53
	0.8	1620	950	304	0.55
T3	0.1	2125	826	334	0.59
	0.2	2098	847	343	0.60
	0.3	2065	870	350	0.62
	0.4	2031	893	361	0.64
	0.5	1996	919	369	0.65
	0.6	1965	943	378	0.67
	0.7	1997	970	391	0.69
	0.8	1888	998	399	0.71
T4	0.1	2264	873	401	0.70
	0.2	2237	893	410	0.72
	0.3	2207	914	418	0.74
	0.4	2176	936	426	0.75
	0.5	2143	959	434	0.77
	0.6	2114	981	445	0.79
	0.7	2147	1006	459	0.81
	0.8	2042	1032	468	0.83
T5	0.1	2337	899	441	0.77
	0.2	2310	919	451	0.79
	0.3	2281	939	459	0.80
	0.4	2251	960	466	0.82
	0.5	2220	982	474	0.84
	0.6	2190	1003	486	0.86
	0.7	2224	1028	499	0.88
	0.8	2121	1052	510	0.90

* In DSH0361D / DSH0363D, DSH0364D / DSH0367D, DSH0481D / DSH0483D, DSH0484D / DSH0487D, DSH0601D / DSH0603D, AND DSH0604D / DSH0607D DOWNSHOT & HORIZONTAL Tables, T1 values are for fan mode only

** In DSH0723D / DSH0724D / DSH0727D DOWNSHOT & HORIZONTAL Tables, T1 AND T2 values are for part load only

DSH0723D / DSH0724D / DSH0727D DOWNSHOT

TAP	STATIC	AIRFLOW (CFM)	RPM	WATTS	BHP
T1 **	0.1	1827	259	771	0.14
	0.2	1786	266	793	0.15
	0.3	1746	273	817	0.15
	0.4	1696	281	844	0.15
	0.5	1650	288	875	0.16
	0.6	1602	298	906	0.16
	0.7	1554	307	937	0.17
	0.8	1505	360	969	0.20
T2 **	0.1	1705	220	728	0.11
	0.2	1660	225	752	0.11
	0.3	1615	230	781	0.12
	0.4	1560	240	811	0.12
	0.5	1510	245	844	0.12
	0.6	1460	255	878	0.13
	0.7	1405	265	911	0.13
	0.8	1355	315	944	0.16
T3	0.1	2380	530	967	0.49
	0.2	2340	540	985	0.50
	0.3	2305	550	1002	0.51
	0.4	2275	565	1021	0.52
	0.5	2250	575	1038	0.53
	0.6	2215	580	1060	0.54
	0.7	2180	590	1085	0.55
	0.8	2140	650	1112	0.60
T4	0.1	2238	441	916	0.35
	0.2	2201	450	933	0.36
	0.3	2169	457	949	0.37
	0.4	2133	469	969	0.38
	0.5	2100	477	990	0.38
	0.6	2064	487	1014	0.39
	0.7	2027	497	1040	0.40
	0.8	1985	552	1067	0.44
T5	0.1	2344	505	953	0.45
	0.2	2305	514	971	0.46
	0.3	2272	521	987	0.46
	0.4	2241	535	1006	0.47
	0.5	2211	544	1024	0.48
	0.6	2178	552	1047	0.49
	0.7	2142	562	1071	0.50
	0.8	2100	619	1099	0.55

DSH0723D / DSH0724D / DSH0727D HORIZONTAL

TAP	STATIC	AIRFLOW (CFM)	RPM	WATTS	BHP
T1 **	0.1	1879	741	246	0.40
	0.2	1841	763	252	0.42
	0.3	1807	785	258	0.43
	0.4	1767	807	264	0.44
	0.5	1732	833	272	0.45
	0.6	1687	863	282	0.47
	0.7	1640	893	290	0.49
	0.8	1594	924	298	0.50
T2 **	0.1	1750	700	210	0.34
	0.2	1710	725	215	0.35
	0.3	1675	750	221	0.36
	0.4	1630	775	228	0.38
	0.5	1585	805	236	0.39
	0.6	1540	835	245	0.41
	0.7	1485	870	253	0.42
	0.8	1435	905	261	0.44
T3	0.1	2455	920	514	0.85
	0.2	2420	940	527	0.87
	0.3	2385	960	537	0.89
	0.4	2385	980	545	0.90
	0.5	2335	995	554	0.92
	0.6	2305	1015	560	0.93
	0.7	2275	1030	570	0.95
	0.8	2240	1055	579	0.97
T4	0.1	2305	876	421	0.70
	0.2	2271	896	431	0.72
	0.3	2241	914	439	0.73
	0.4	2226	930	447	0.75
	0.5	2188	948	455	0.76
	0.6	2157	967	463	0.78
	0.7	2124	988	473	0.79
	0.8	2088	1012	482	0.81
T5	0.1	2415	910	485	0.81
	0.2	2381	930	497	0.82
	0.3	2349	949	506	0.84
	0.4	2344	966	514	0.86
	0.5	2297	983	523	0.87
	0.6	2270	999	530	0.89
	0.7	2237	1019	539	0.90
	0.8	2203	1041	549	0.92

** In DSH0723D / DSH0724D / DSH0727D DOWNSHOT & HORIZONTAL Tables, T1 AND T2 values are for part load only

DSH0363W / DSH0364W / DSH0367W DOWNSHOT

TAP	STATIC	AIRFLOW (CFM)	RPM	WATTS	BHP
T1 *	0.8	1100	927	218	0.36
	0.9	1042	960	225	0.38
	1	983	993	233	0.39
	1.1	935	1027	240	0.40
	1.2	873	1058	248	0.42
	1.3	824	1087	253	0.43
	1.4	775	1113	258	0.44
	1.5	725	1138	262	0.45
	1.6	668	1164	276	0.46
	1.7	634	1188	283	0.47
	1.8	601	1212	290	0.48
T2	0.8	1418	986	303	0.52
	0.9	1368	1017	313	0.54
	1	1319	1047	323	0.55
	1.1	1269	1077	332	0.57
	1.2	1218	1107	341	0.59
	1.3	1167	1137	350	0.60
	1.4	1116	1164	358	0.62
	1.5	1065	1192	365	0.63
	1.6	1014	1216	371	0.64
	1.7	973	1241	379	0.66
	1.8	931	1265	387	0.67
T3	0.8	-	-	-	-
	0.9	1500	1045	363	0.63
	1	1472	1074	374	0.64
	1.1	1422	1103	383	0.66
	1.2	1376	1132	393	0.68
	1.3	1325	1161	404	0.70
	1.4	1274	1189	413	0.71
	1.5	1224	1216	422	0.73
	1.6	1176	1241	426	0.74
	1.7	1132	1265	434	0.76
	1.8	1088	1290	442	0.77
T4	0.8	1401	983	298	0.51
	0.9	1351	1014	308	0.53
	1	1301	1044	318	0.54
	1.1	1251	1074	326	0.56
	1.2	1200	1104	335	0.58
	1.3	1149	1134	345	0.59
	1.4	1098	1162	352	0.61
	1.5	1047	1189	359	0.62
	1.6	995	1214	366	0.63
	1.7	954	1238	373	0.65
	1.8	913	1262	381	0.66
T5	0.8	1495	1001	328	0.57
	0.9	1448	1031	339	0.58
	1	1400	1061	349	0.60
	1.1	1351	1091	358	0.62
	1.2	1302	1120	367	0.63
	1.3	1251	1150	378	0.65
	1.4	1200	1177	386	0.67
	1.5	1149	1205	395	0.68
	1.6	1100	1229	399	0.70
	1.7	1057	1254	407	0.71
	1.8	1014	1278	415	0.72

DSH0363W / DSH0364W / DSH0367W DOWNSHOT

TAP	STATIC	AIRFLOW (CFM)	RPM	WATTS	BHP
T1'	0.8	1317	967	273	0.47
	0.9	1265	998	282	0.48
	1	1213	1029	292	0.50
	1.1	1163	1061	300	0.51
	1.2	1109	1091	308	0.53
	1.3	1058	1121	317	0.54
	1.4	1007	1148	323	0.56
	1.5	956	1175	330	0.57
	1.6	903	1200	338	0.58
	1.7	-	-	-	-
	1.8	-	-	-	-
T2'	0.8	-	-	-	-
	0.9	-	-	-	-
	1	1546	1088	402	0.69
	1.1	1497	1116	412	0.71
	1.2	1453	1144	421	0.73
	1.3	1402	1174	433	0.75
	1.4	1352	1201	443	0.76
	1.5	1302	1228	452	0.78
	1.6	1255	1253	456	0.80
	1.7	1211	1277	464	0.81
	1.8	1167	1302	473	0.83
T3'	0.8	-	-	-	-
	0.9	-	-	-	-
	1				
	1.1	1645	1143	474	0.82
	1.2	1604	1170	484	0.83
	1.3	1555	1198	497	0.85
	1.4	1507	1225	508	0.87
	1.5	1459	1253	519	0.89
	1.6	1415	1277	523	0.91
	1.7	1370	1301	532	0.93
	1.8	1325	1326	541	0.95
T4'	0.8	-	-	-	-
	0.9	-	-	-	-
	1	1495	1078	382	0.66
	1.1	1445	1107	392	0.68
	1.2	1400	1135	401	0.69
	1.3	1349	1165	413	0.71
	1.4	1298	1193	422	0.73
	1.5	1248	1220	431	0.74
	1.6	1200	1244	435	0.76
	1.7	1156	1269	443	0.77
	1.8	1112	1293	452	0.79
T5'	0.8	-	-	-	-
	0.9	-	-	-	-
	1	-	-	-	-
	1.1	-	-	-	-
	1.2	1485	1150	434	0.75
	1.3	1435	1179	446	0.77
	1.4	1385	1206	456	0.79
	1.5	1335	1233	466	0.80
	1.6	1289	1258	469	0.82
	1.7	1245	1282	478	0.84
	1.8	1200	1307	487	0.85

* In DSH0363W / DSH0364W / DSH0367W, DSH0483W / DSH0484W / DSH0487W, AND DSH06083W / DSH0604W / DSH0607W DOWNSHOT & HORIZONTAL Tables, T1 values are for fan mode only

DSH0363W / DSH0364W / DSH0367W HORIZONTAL

TAP	STATIC	AIRFLOW (CFM)	RPM	WATTS	BHP
T1 *	0.8	1181	880	208	0.35
	0.9	1118	917	215	0.36
	1	1055	954	222	0.37
	1.1	1000	987	228	0.39
	1.2	944	1020	235	0.40
	1.3	892	1055	241	0.41
	1.4	838	1085	248	0.43
	1.5	789	1117	255	0.44
	1.6	774	1163	227	0.46
	1.7	670	1183	247	0.46
	1.8	630	1209	265	0.47
T2	0.8	1500	923	290	0.49
	0.9	1467	958	300	0.51
	1	1413	992	309	0.52
	1.1	1362	1025	316	0.54
	1.2	1311	1057	324	0.56
	1.3	1260	1089	338	0.58
	1.4	1210	1117	346	0.59
	1.5	1162	1147	353	0.61
	1.6	1126	1181	351	0.63
	1.7	1058	1205	367	0.64
	1.8	1004	1233	381	0.65
T3	0.8	-	-	-	-
	0.9	-	-	-	-
	1	1576	1012	357	0.61
	1.1	1527	1044	365	0.63
	1.2	1478	1076	373	0.64
	1.3	1429	1106	389	0.66
	1.4	1380	1134	398	0.68
	1.5	1333	1163	407	0.70
	1.6	1290	1192	414	0.71
	1.7	1234	1218	427	0.73
	1.8	1177	1246	440	0.75
T4	0.8	1500	921	285	0.48
	0.9	1449	955	294	0.50
	1	1394	990	304	0.52
	1.1	1343	1022	311	0.53
	1.2	1291	1055	319	0.55
	1.3	1241	1087	332	0.57
	1.4	1190	1116	340	0.58
	1.5	1142	1146	348	0.60
	1.6	1107	1180	344	0.62
	1.7	1037	1204	360	0.63
	1.8	983	1232	374	0.64
T5	0.8	-	-	-	-
	0.9	-	-	-	-
	1	1500	1002	334	0.57
	1.1	1450	1034	341	0.59
	1.2	1399	1067	349	0.60
	1.3	1350	1098	364	0.62
	1.4	1300	1126	373	0.64
	1.5	1253	1156	381	0.65
	1.6	1213	1187	384	0.67
	1.7	1152	1212	398	0.69
	1.8	1095	1240	412	0.70

DSH0363W / DSH0364W / DSH0367W HORIZONTAL

TAP	STATIC	AIRFLOW (CFM)	RPM	WATTS	BHP
T1'	0.8	1414	909	262	0.44
	0.9	1357	944	270	0.46
	1	1300	979	279	0.47
	1.1	1247	1012	286	0.49
	1.2	1194	1045	293	0.51
	1.3	1143	1078	305	0.52
	1.4	1092	1107	313	0.54
	1.5	1044	1137	320	0.55
	1.6	1014	1174	310	0.57
	1.7	935	1197	327	0.58
	1.8	900	1225	342	0.59
T2'	0.8	-	-	-	-
	0.9	-	-	-	-
	1	1655	1022	383	0.65
	1.1	1607	1053	391	0.67
	1.2	1560	1085	400	0.69
	1.3	1511	1115	416	0.71
	1.4	1463	1142	426	0.73
	1.5	1417	1171	435	0.74
	1.6	1371	1199	446	0.76
	1.7	1320	1225	459	0.78
	1.8	1263	1253	471	0.80
T3'	0.8	-	-	-	-
	0.9	-	-	-	-
	1				
	1.1				
	1.2				
	1.3	1673	1133	475	0.81
	1.4	1627	1160	486	0.83
	1.5	1582	1188	497	0.85
	1.6	1532	1213	513	0.87
	1.7	1489	1240	525	0.88
	1.8	1433	1268	536	0.90
T4'	0.8	-	-	-	-
	0.9	-	-	-	-
	1	-	-	-	-
	1.1	-	-	-	-
	1.2	1500	1078	381	0.66
	1.3	1454	1109	397	0.68
	1.4	1405	1136	406	0.69
	1.5	1359	1166	415	0.71
	1.6	1315	1194	423	0.73
	1.7	1261	1220	437	0.74
	1.8	1203	1248	450	0.76
T5'	0.8	-	-	-	-
	0.9	-	-	-	-
	1	-	-	-	-
	1.1	1641	1058	403	0.69
	1.2	1594	1089	412	0.71
	1.3	1546	1119	428	0.73
	1.4	1498	1146	438	0.75
	1.5	1452	1175	448	0.77
	1.6	1405	1201	460	0.78
	1.7	1357	1228	472	0.80
	1.8	1299	1256	485	0.82

* In DSH0363W / DSH0364W / DSH0367W, DSH0483W / DSH0484W / DSH0487W, AND DSH06083W / DSH0604W / DSH0607W DOWNSHOT & HORIZONTAL Tables, T1 values are for fan mode only

DSH0483W / DSH0484W / DSH0487W DOWNSHOT

TAP	STATIC	AIRFLOW (CFM)	RPM	WATTS	BHP
T1 *	0.8	1353	961	270	0.48
	0.9	1304	992	279	0.50
	1	1255	1023	287	0.51
	1.1	1202	1055	295	0.53
	1.2	1146	1087	303	0.54
	1.3	1099	1114	307	0.56
	1.4	1045	1139	317	0.57
	1.5	998	1164	323	0.58
	1.6	974	1182	315	0.59
	1.7	908	1217	334	0.61
	1.8	870	1238	335	0.62
T2	0.8	1804	1052	425	0.76
	0.9	1763	1079	436	0.78
	1	1722	1107	446	0.80
	1.1	1674	1133	459	0.82
	1.2	1632	1161	471	0.84
	1.3	1589	1189	478	0.86
	1.4	1541	1215	489	0.88
	1.5	1497	1241	498	0.89
	1.6	1447	1265	508	0.91
	1.7	1405	1287	516	0.93
	1.8	1364	1310	523	0.94
T3	0.8	1814	1054	430	0.77
	0.9	1773	1081	440	0.79
	1	1732	1109	451	0.81
	1.1	1685	1135	464	0.82
	1.2	1643	1163	476	0.85
	1.3	1600	1190	483	0.86
	1.4	1553	1216	494	0.88
	1.5	1508	1242	503	0.90
	1.6	1459	1267	513	0.92
	1.7	1417	1289	521	0.94
	1.8	1376	1312	528	0.95
T4	0.8	1775	1045	412	0.74
	0.9	1733	1073	423	0.76
	1	1691	1101	433	0.77
	1.1	1643	1127	446	0.79
	1.2	1600	1156	458	0.81
	1.3	1556	1183	465	0.83
	1.4	1508	1209	475	0.85
	1.5	1463	1235	484	0.87
	1.6	1414	1259	493	0.89
	1.7	1371	1282	501	0.90
	1.8	1329	1305	508	0.92
T5	0.8	1856	1064	449	0.80
	0.9	1815	1091	460	0.82
	1	1775	1117	471	0.84
	1.1	1730	1144	483	0.86
	1.2	1689	1171	496	0.88
	1.3	1646	1198	503	0.90
	1.4	1600	1224	514	0.92
	1.5	1556	1250	524	0.94
	1.6	1506	1274	535	0.96
	1.7	1466	1296	542	0.97
	1.8	1425	1319	550	0.99

DSH0483W / DSH0484W / DSH0487W DOWNSHOT

TAP	STATIC	AIRFLOW (CFM)	RPM	WATTS	BHP
T1'	0.8	1552	999	329	0.59
	0.9	1506	1028	339	0.60
	1	1460	1058	348	0.62
	1.1	1409	1087	359	0.64
	1.2	1359	1118	369	0.66
	1.3	1313	1145	374	0.67
	1.4	1260	1171	384	0.69
	1.5	1214	1197	391	0.70
	1.6	-	-	-	-
	1.7	-	-	-	-
	1.8	-	-	-	-
T2'	0.8	1998	1101	525	0.93
	0.9	1960	1125	536	0.95
	1	1922	1150	548	0.97
	1.1	1883	1175	561	0.99
	1.2	1846	1200	574	1.02
	1.3	1807	1226	582	1.04
	1.4	1766	1251	594	1.06
	1.5	1725	1276	606	1.08
	1.6	1679	1301	618	1.10
	1.7	1641	1322	626	1.12
	1.8	1601	1346	637	1.14
T3'	0.8	1877	1069	459	0.82
	0.9	1837	1096	470	0.84
	1	1797	1122	481	0.86
	1.1	1752	1148	494	0.88
	1.2	1712	1175	506	0.90
	1.3	1670	1202	514	0.92
	1.4	1624	1228	525	0.94
	1.5	1581	1254	535	0.96
	1.6	1531	1278	546	0.98
	1.7	1491	1300	554	0.99
	1.8	1450	1323	562	1.01
T4'	0.8	1935	1084	489	0.87
	0.9	1896	1109	500	0.89
	1	1857	1135	511	0.91
	1.1	1814	1160	524	0.93
	1.2	1775	1187	537	0.95
	1.3	1735	1213	545	0.97
	1.4	1691	1239	556	0.99
	1.5	1649	1264	567	1.01
	1.6	1600	1289	579	1.03
	1.7	1561	1310	586	1.05
	1.8	1521	1334	596	1.07
T5'	0.8	1997	1101	525	0.93
	0.9	1959	1125	536	0.95
	1	1922	1150	547	0.97
	1.1	1882	1174	560	0.99
	1.2	1845	1200	573	1.01
	1.3	1806	1226	581	1.04
	1.4	1765	1251	594	1.06
	1.5	1724	1276	606	1.08
	1.6	1678	1300	617	1.10
	1.7	1640	1322	626	1.12
	1.8	1600	1346	636	1.14

* In DSH0363W / DSH0364W / DSH0367W, DSH0483W / DSH0484W / DSH0487W, AND DSH06083W / DSH0604W / DSH0607W DOWNSHOT & HORIZONTAL Tables, T1 values are for fan mode only

DSH0483W / DSH0484W / DSH0487W HORIZONTAL

TAP	STATIC	AIRFLOW (CFM)	RPM	WATTS	BHP
T1 *	0.8	1438	926	257	0.46
	0.9	1384	962	266	0.48
	1	1332	999	275	0.50
	1.1	1282	1034	283	0.52
	1.2	1223	1069	292	0.53
	1.3	1170	1101	303	0.55
	1.4	1123	1130	311	0.56
	1.5	1067	1157	317	0.58
	1.6	1021	1181	322	0.59
	1.7	973	1201	329	0.60
	1.8	943	1222	332	0.61
T2	0.8	1903	1001	405	0.72
	0.9	1863	1030	415	0.74
	1	1819	1057	424	0.76
	1.1	1774	1086	436	0.78
	1.2	1726	1117	449	0.81
	1.3	1677	1148	462	0.83
	1.4	1627	1178	472	0.85
	1.5	1572	1211	483	0.87
	1.6	1528	1240	490	0.89
	1.7	1485	1271	502	0.92
	1.8	1431	1295	515	0.93
T3	0.8	1913	1003	409	0.73
	0.9	1874	1032	420	0.75
	1	1830	1058	428	0.77
	1.1	1785	1087	440	0.79
	1.2	1737	1118	453	0.81
	1.3	1689	1149	466	0.83
	1.4	1639	1179	477	0.86
	1.5	1585	1212	488	0.88
	1.6	1540	1241	495	0.90
	1.7	1498	1272	507	0.92
	1.8	1443	1297	520	0.94
T4	0.8	1872	995	393	0.70
	0.9	1832	1024	403	0.72
	1	1787	1052	412	0.74
	1.1	1741	1082	424	0.76
	1.2	1692	1114	436	0.78
	1.3	1643	1145	449	0.81
	1.4	1592	1175	460	0.83
	1.5	1537	1208	470	0.85
	1.6	1491	1237	477	0.87
	1.7	1450	1266	488	0.89
	1.8	1395	1289	501	0.91
T5	0.8	1957	1012	428	0.76
	0.9	1917	1040	438	0.78
	1	1876	1065	446	0.80
	1.1	1832	1093	459	0.82
	1.2	1785	1124	472	0.84
	1.3	1738	1154	485	0.87
	1.4	1689	1183	496	0.89
	1.5	1636	1216	507	0.91
	1.6	1592	1246	515	0.94
	1.7	1549	1278	527	0.96
	1.8	1494	1304	541	0.98

DSH0483W / DSH0484W / DSH0487W HORIZONTAL

TAP	STATIC	AIRFLOW (CFM)	RPM	WATTS	BHP
T1'	0.8	1642	955	313	0.56
	0.9	1595	989	324	0.58
	1	1546	1022	332	0.60
	1.1	1496	1056	343	0.62
	1.2	1441	1090	353	0.64
	1.3	1390	1123	364	0.66
	1.4	1339	1153	374	0.68
	1.5	1281	1183	383	0.70
	1.6	1234	1209	388	0.71
	1.7	1200	1232	397	0.72
	1.8	-	-	-	-
T2'	0.8	-	-	-	-
	0.9	-	-	-	-
	1	-	-	-	-
	1.1	1994	1120	531	0.95
	1.2	1953	1147	545	0.97
	1.3	1909	1174	561	0.99
	1.4	1867	1201	569	1.02
	1.5	1821	1233	582	1.04
	1.6	1784	1262	591	1.07
	1.7	1734	1295	607	1.10
	1.8	1682	1326	621	1.12
T3'	0.8	1979	1017	438	0.78
	0.9	1940	1044	447	0.80
	1	1899	1069	456	0.82
	1.1	1856	1097	468	0.84
	1.2	1810	1127	482	0.86
	1.3	1763	1156	496	0.88
	1.4	1715	1185	506	0.91
	1.5	1662	1219	517	0.93
	1.6	1620	1249	525	0.95
	1.7	1575	1281	538	0.98
	1.8	1520	1308	552	1.00
T4'	0.8	-	-	-	-
	0.9	2000	1057	475	0.85
	1	1962	1080	484	0.87
	1.1	1921	1107	497	0.89
	1.2	1878	1136	510	0.91
	1.3	1832	1164	525	0.93
	1.4	1786	1192	534	0.96
	1.5	1736	1225	547	0.98
	1.6	1696	1255	555	1.01
	1.7	1650	1288	569	1.03
	1.8	1595	1318	583	1.06
T5'	0.8	-	-	-	-
	0.9	-	-	-	-
	1	-	-	-	-
	1.1	1993	1120	530	0.95
	1.2	1952	1147	544	0.97
	1.3	1909	1174	560	0.99
	1.4	1866	1201	568	1.02
	1.5	1820	1233	582	1.04
	1.6	1783	1262	591	1.07
	1.7	1733	1295	607	1.10
	1.8	1681	1326	621	1.12

* In DSH0363W / DSH0364W / DSH0367W, DSH0483W / DSH0484W / DSH0487W, AND DSH06083W / DSH0604W / DSH0607W DOWNSHOT & HORIZONTAL Tables, T1 values are for fan mode only

DSH06083W / DSH0604W / DSH0607W DOWNSHOT

TAP	STATIC	AIRFLOW (CFM)	RPM	WATTS	BHP
T1 *	0.8	1584	1020	358	0.58
	0.9	1540	1053	366	0.60
	1	1496	1085	375	0.61
	1.1	1455	1112	383	0.63
	1.2	1415	1140	391	0.65
	1.3	1374	1170	402	0.66
	1.4	1338	1198	421	0.68
	1.5	1302	1221	428	0.69
	1.6	1255	1243	443	0.70
	1.7	1231	1268	452	0.72
	1.8	1212	1288	460	0.73
T2	0.8	2038	1121	556	0.92
	0.9	2000	1151	565	0.95
	1	1961	1180	573	0.97
	1.1	1924	1207	585	0.99
	1.2	1887	1233	596	1.01
	1.3	1850	1260	611	1.04
	1.4	1814	1284	623	1.06
	1.5	1777	1309	636	1.08
	1.6	1743	1334	656	1.10
	1.7	1703	1354	665	1.11
	1.8	1659	1374	675	1.13
T3	0.8	2086	1134	583	0.97
	0.9	2049	1163	592	0.99
	1	2011	1191	601	1.02
	1.1	1974	1218	613	1.04
	1.2	1936	1244	624	1.06
	1.3	1900	1270	640	1.08
	1.4	1863	1294	652	1.10
	1.5	1827	1319	665	1.13
	1.6	1794	1344	685	1.15
	1.7	1751	1365	693	1.16
	1.8	1704	1385	704	1.18
T4	0.8	2148	1150	620	1.03
	0.9	2111	1178	630	1.05
	1	2074	1206	639	1.08
	1.1	2037	1232	651	1.10
	1.2	2000	1258	663	1.13
	1.3	1963	1284	679	1.15
	1.4	1926	1307	690	1.17
	1.5	1889	1332	704	1.19
	1.6	1858	1357	723	1.21
	1.7	1812	1378	732	1.23
	1.8	1761	1398	743	1.25
T5	0.8	2220	1170	667	1.11
	0.9	2184	1197	677	1.13
	1	2148	1224	687	1.16
	1.1	2111	1249	700	1.18
	1.2	2075	1275	712	1.21
	1.3	2037	1300	729	1.23
	1.4	2000	1323	739	1.25
	1.5	1963	1348	754	1.28
	1.6	1934	1373	771	1.30
	1.7	1883	1394	781	1.32
	1.8	1829	1415	793	1.34

DSH06083W / DSH0604W / DSH0607W DOWNSHOT

TAP	STATIC	AIRFLOW (CFM)	RPM	WATTS	BHP
T1'	0.8	1730	1050	411	0.67
	0.9	1687	1082	419	0.69
	1	1645	1113	428	0.71
	1.1	1605	1141	437	0.73
	1.2	1566	1168	446	0.75
	1.3	1529	1197	459	0.77
	1.4	1500	1224	475	0.78
	1.5	-	-	-	-
	1.6	-	-	-	-
	1.7	-	-	-	-
	1.8	-	-	-	-
T2'	0.8	2259	1181	694	1.15
	0.9	2224	1207	705	1.18
	1	2188	1233	715	1.20
	1.1	2152	1259	728	1.23
	1.2	2116	1284	741	1.25
	1.3	2077	1309	757	1.28
	1.4	2040	1331	767	1.30
	1.5	2003	1356	782	1.32
	1.6	1974	1381	799	1.35
	1.7	1921	1403	809	1.37
	1.8	1867	1424	821	1.39
T3'	0.8	2136	1147	613	1.02
	0.9	2099	1175	622	1.04
	1	2062	1203	632	1.07
	1.1	2025	1229	644	1.09
	1.2	1988	1256	656	1.11
	1.3	1951	1281	672	1.14
	1.4	1914	1305	683	1.16
	1.5	1877	1330	697	1.18
	1.6	1846	1355	716	1.20
	1.7	1801	1375	725	1.22
	1.8	1750	1396	735	1.24
T4'	0.8	2284	1188	712	1.18
	0.9	2249	1214	723	1.21
	1	2214	1240	733	1.23
	1.1	2178	1265	746	1.26
	1.2	2142	1290	760	1.28
	1.3	2103	1314	776	1.31
	1.4	2066	1337	786	1.33
	1.5	2028	1362	801	1.35
	1.6	2000	1387	817	1.38
	1.7	1946	1409	828	1.40
	1.8	1892	1430	840	1.42
T5'	0.8	2390	1219	794	1.31
	0.9	2357	1243	806	1.34
	1	2323	1267	817	1.36
	1.1	2287	1291	831	1.39
	1.2	2252	1315	845	1.42
	1.3	2211	1339	862	1.44
	1.4	2173	1360	871	1.46
	1.5	2135	1385	887	1.49
	1.6	2107	1410	899	1.52
	1.7	2049	1433	912	1.54
	1.8	2000	1456	925	1.57

* In DSH0363W / DSH0364W / DSH0367W, DSH0483W / DSH0484W / DSH0487W, AND DSH06083W / DSH0604W / DSH0607W DOWNSHOT & HORIZONTAL Tables, T1 values are for fan mode only

DSH0603W / DSH0604W / DSH0607W HORIZONTAL

TAP	STATIC	AIRFLOW (CFM)	RPM	WATTS	BHP
T1 *	0.8	1674	978	350	0.55
	0.9	1630	1011	363	0.57
	1	1587	1043	373	0.59
	1.1	1535	1074	384	0.61
	1.2	1499	1105	395	0.63
	1.3	1458	1134	407	0.64
	1.4	1447	1172	435	0.66
	1.5	1408	1198	454	0.68
	1.6	1370	1221	459	0.69
	1.7	1331	1247	465	0.71
	1.8	1293	1271	474	0.72
T2	0.8	2150	1065	532	0.88
	0.9	2115	1093	548	0.90
	1	2080	1121	562	0.92
	1.1	2043	1149	573	0.94
	1.2	2003	1176	586	0.97
	1.3	1967	1203	602	0.99
	1.4	1904	1227	610	1.01
	1.5	1861	1255	620	1.03
	1.6	1822	1281	635	1.05
	1.7	1782	1305	646	1.07
	1.8	1742	1331	660	1.09
T3	0.8	2200	1076	556	0.92
	0.9	2165	1103	572	0.94
	1	2131	1130	587	0.96
	1.1	2097	1158	598	0.99
	1.2	2055	1184	611	1.01
	1.3	2020	1211	627	1.03
	1.4	1957	1234	634	1.05
	1.5	1915	1262	645	1.08
	1.6	1875	1288	660	1.10
	1.7	1836	1312	672	1.12
	1.8	1797	1338	685	1.14
T4	0.8	2262	1090	589	0.98
	0.9	2229	1116	605	1.00
	1	2195	1143	620	1.02
	1.1	2165	1169	631	1.05
	1.2	2121	1195	644	1.07
	1.3	2087	1221	660	1.09
	1.4	2026	1243	667	1.11
	1.5	1984	1271	679	1.14
	1.6	1945	1297	695	1.16
	1.7	1907	1320	706	1.18
	1.8	1868	1347	720	1.21
T5	0.8	2335	1107	631	1.05
	0.9	2303	1132	647	1.07
	1	2270	1157	663	1.10
	1.1	2244	1183	673	1.12
	1.2	2199	1207	686	1.14
	1.3	2165	1233	702	1.17
	1.4	2109	1255	709	1.19
	1.5	2068	1282	722	1.21
	1.6	2030	1307	739	1.24
	1.7	1993	1331	751	1.26
	1.8	1955	1357	764	1.28

DSH0603W / DSH0604W / DSH0607W HORIZONTAL

TAP	STATIC	AIRFLOW (CFM)	RPM	WATTS	BHP
T1'	0.8	1829	1004	401	0.64
	0.9	1788	1036	415	0.66
	1	1747	1066	427	0.68
	1.1	1698	1097	438	0.70
	1.2	1662	1127	450	0.72
	1.3	1623	1156	463	0.74
	1.4	1585	1188	483	0.76
	1.5	1544	1215	497	0.78
	1.6	1504	1240	505	0.79
	1.7	-	-	-	-
	1.8	-	-	-	-
T2'	0.8	2375	1116	655	1.09
	0.9	2343	1141	671	1.11
	1	2311	1166	687	1.14
	1.1	2288	1190	698	1.16
	1.2	2241	1214	711	1.18
	1.3	2208	1240	727	1.21
	1.4	2154	1261	734	1.23
	1.5	2114	1288	748	1.26
	1.6	2077	1313	766	1.28
	1.7	2041	1337	777	1.30
	1.8	2003	1363	790	1.33
T3'	0.8	2250	1087	583	0.96
	0.9	2217	1114	599	0.99
	1	2183	1140	614	1.01
	1.1	2152	1167	625	1.03
	1.2	2109	1193	638	1.06
	1.3	2074	1219	654	1.08
	1.4	2013	1241	661	1.10
	1.5	1971	1269	672	1.13
	1.6	1932	1295	688	1.15
	1.7	1894	1319	700	1.17
	1.8	1854	1345	713	1.19
T4'	0.8	2400	1123	671	1.12
	0.9	2368	1147	687	1.14
	1	2336	1171	704	1.16
	1.1	2315	1195	714	1.19
	1.2	2268	1219	727	1.21
	1.3	2234	1244	743	1.24
	1.4	2183	1265	750	1.26
	1.5	2144	1292	765	1.28
	1.6	2107	1317	783	1.31
	1.7	2071	1340	794	1.33
	1.8	2034	1366	807	1.36
T5'	0.8	2500	1150	745	1.24
	0.9	2476	1172	761	1.26
	1	2445	1195	778	1.29
	1.1	2430	1217	788	1.31
	1.2	2380	1239	801	1.33
	1.3	2348	1263	817	1.36
	1.4	2309	1285	826	1.38
	1.5	2271	1310	843	1.41
	1.6	2237	1334	862	1.44
	1.7	2203	1357	874	1.46
	1.8	2167	1382	885	1.49

* In DSH0363W / DSH0364W / DSH0367W, DSH0483W / DSH0484W / DSH0487W, AND DSH06083W / DSH0604W / DSH0607W DOWNSHOT & HORIZONTAL Tables, T1 values are for fan mode only

DSH0723W / DSH0724W / DSH0727W DOWNSHOT

TAP	STATIC	AIRFLOW (CFM)	RPM	WATTS	BHP
T1 **	0.6	1920	1045	450	0.85
	0.8	1845	1097	472	0.89
	0.9	1800	1126	485	0.91
	1	1762	1151	492	0.93
	1.1	1729	1177	510	0.96
	1.2	1690	1202	518	0.98
	1.3	1650	1227	527	1.00
	1.4	1612	1251	538	1.02
	1.5	1574	1274	549	1.03
	1.6	1543	1297	560	1.05
	1.8	-	-	-	-
T2 **	0.6	1840	1024	413	0.78
	0.8	1760	1076	433	0.82
	0.9	1715	1105	445	0.84
	1	1675	1131	451	0.86
	1.1	1641	1158	470	0.88
	1.2	1600	1184	478	0.90
	1.3	1558	1209	486	0.92
	1.4	1519	1233	497	0.94
	1.5	1479	1257	507	0.96
	1.6	1446	1280	518	0.98
	1.8	-	-	-	-
T3	0.6	2590	1242	895	1.60
	0.8	2527	1282	919	1.66
	0.9	2491	1304	935	1.68
	1	2462	1323	946	1.71
	1.1	2434	1341	963	1.73
	1.2	2403	1362	974	1.76
	1.3	2371	1383	985	1.79
	1.4	2339	1405	999	1.81
	1.5	2306	1426	1013	1.84
	1.6	2248	1445	1024	1.87
	1.8	-	-	-	-
T4	0.6	2402	1182	740	1.36
	0.8	2338	1228	764	1.40
	0.9	2298	1252	779	1.43
	1	2267	1272	790	1.45
	1.1	2240	1293	807	1.48
	1.2	2207	1315	817	1.50
	1.3	2175	1337	827	1.53
	1.4	2143	1359	841	1.55
	1.5	2111	1380	855	1.58
	1.6	2070	1401	866	1.60
	1.8	-	-	-	-
T5	0.6	2654	1280	950	1.70
	0.8	2588	1300	977	1.75
	0.9	2554	1321	992	1.77
	1	2524	1339	1004	1.80
	1.1	2496	1357	1020	1.82
	1.2	2464	1378	1032	1.85
	1.3	2433	1398	1043	1.88
	1.4	2400	1420	1057	1.91
	1.5	2367	1442	1070	1.94
	1.6	2300	1461	1082	1.96
	1.8	-	-	-	-

DSH0723W / DSH0724W / DSH0727W DOWNSHOT

TAP	STATIC	AIRFLOW (CFM)	RPM	WATTS	BHP
T1 **	0.6	2013	1074	495	0.95
	0.8	1940	1121	518	0.98
	0.9	1895	1149	532	1.00
	1	1859	1173	539	1.02
	1.1	1828	1199	558	1.04
	1.2	1790	1223	567	1.06
	1.3	1752	1247	575	1.09
	1.4	1716	1270	587	1.11
	1.5	1679	1293	599	1.13
	1.6	1650	1316	610	1.15
	1.8	-	-	-	-
T2 **	0.6	1950	1050	458	0.85
	0.8	1858	1100	478	0.90
	0.9	1813	1129	491	0.93
	1	1775	1154	498	0.95
	1.1	1743	1180	516	0.97
	1.2	1703	1205	525	0.99
	1.3	1664	1230	533	1.01
	1.4	1626	1253	544	1.03
	1.5	1589	1276	556	1.05
	1.6	1558	1300	566	1.07
	1.8	-	-	-	-
T3'	0.6	2740	1290	1040	1.84
	0.8	2675	1328	1067	1.89
	0.9	2643	1346	1081	1.91
	1	2614	1364	1094	1.94
	1.1	2585	1381	1109	1.96
	1.2	2552	1401	1122	1.99
	1.3	2520	1421	1134	2.02
	1.4	2487	1443	1147	2.05
	1.5	2453	1465	1160	2.08
	1.6	2371	1483	1171	2.11
	1.8	-	-	-	-
T4'	0.6	2515	1215	823	1.49
	0.8	2447	1259	850	1.54
	0.9	2409	1282	865	1.57
	1	2379	1301	876	1.60
	1.1	2352	1320	893	1.62
	1.2	2320	1342	904	1.65
	1.3	2289	1363	915	1.67
	1.4	2256	1385	928	1.70
	1.5	2224	1406	942	1.72
	1.6	2175	1426	954	1.75
	1.8	-	-	-	-
T5'	0.6	2780	1300	1083	1.89
	0.8	2713	1340	1109	1.95
	0.9	2682	1357	1123	1.98
	1	2654	1375	1137	2.01
	1.1	2623	1391	1151	2.03
	1.2	2591	1411	1164	2.06
	1.3	2558	1431	1177	2.09
	1.4	2524	1453	1190	2.12
	1.5	2489	1476	1203	2.15
	1.6	2400	1493	1214	2.18
	1.8	-	-	-	-

** In DSH0723W / DSH0724W / DSH0727W DOWNSHOT & HORIZONTAL Tables, T1, T1',T2, and T2' values are for part load only

DSH0723W / DSH0724W / DSH0727W HORIZONTAL

TAP	STATIC	AIRFLOW (CFM)	RPM	WATTS	BHP
T1 **	0.6	1880	955	417	0.80
	0.8	1967	1018	440	0.85
	0.9	1929	1043	450	0.87
	1	1886	1072	462	0.89
	1.1	1843	1100	474	0.92
	1.2	1798	1134	492	0.95
	1.3	1754	1168	510	0.95
	1.4	1707	1200	521	0.97
	1.5	1661	1232	532	1.00
	1.6	1614	1260	536	1.02
	1.8	-	-	-	-
T2 **	0.6	1970	938	380	0.72
	0.8	1879	999	404	0.76
	0.9	1838	1027	415	0.78
	1	1792	1057	427	0.80
	1.1	1746	1087	439	0.83
	1.2	1701	1121	457	0.85
	1.3	1656	1156	477	0.88
	1.4	1607	1188	487	0.90
	1.5	1557	1221	498	0.93
	1.6	1511	1249	495	0.95
	1.8	-	-	-	-
T3	0.6	2714	1168	840	1.50
	0.8	2658	1202	863	1.55
	0.9	2638	1215	870	1.57
	1	2614	1231	879	1.59
	1.1	2590	1247	888	1.61
	1.2	2557	1264	901	1.63
	1.3	2524	1280	912	1.65
	1.4	2494	1300	926	1.68
	1.5	2464	1319	940	1.70
	1.6	2426	1344	964	1.74
	1.8	-	-	-	-
T4	0.6	2536	1102	690	1.27
	0.8	2470	1145	716	1.31
	0.9	2446	1161	723	1.33
	1	2418	1180	733	1.35
	1.1	2390	1200	744	1.37
	1.2	2352	1222	758	1.40
	1.3	2314	1244	770	1.42
	1.4	2280	1267	784	1.45
	1.5	2247	1291	797	1.47
	1.6	2205	1318	822	1.51
	1.8	-	-	-	-
T5	0.6	2663	1190	896	1.60
	0.8	2718	1222	918	1.64
	0.9	2699	1233	925	1.66
	1	2675	1248	933	1.68
	1.1	2652	1264	942	1.70
	1.2	2621	1279	953	1.72
	1.3	2591	1293	964	1.74
	1.4	2561	1312	979	1.76
	1.5	2532	1330	993	1.79
	1.6	2496	1354	1015	1.82
	1.8	-	-	-	-

DSH0723W / DSH0724W / DSH0727W HORIZONTAL

TAP	STATIC	AIRFLOW (CFM)	RPM	WATTS	BHP
T1 **	0.6	1982	980	460	0.85
	0.8	2064	1039	484	0.90
	0.9	2030	1063	493	0.93
	1	1990	1090	505	0.95
	1.1	1950	1116	517	0.97
	1.2	1906	1149	534	1.00
	1.3	1862	1181	551	1.03
	1.4	1819	1212	562	1.06
	1.5	1775	1243	574	1.08
	1.6	1729	1272	583	1.11
	1.8	-	-	-	-
T2 **	0.6	1895	960	422	0.80
	0.8	1980	1021	446	0.84
	0.9	1943	1046	456	0.86
	1	1900	1074	468	0.88
	1.1	1858	1102	480	0.90
	1.2	1813	1136	497	0.93
	1.3	1768	1170	516	0.96
	1.4	1722	1201	527	0.99
	1.5	1676	1233	538	1.01
	1.6	1630	1262	542	1.03
	1.8	-	-	-	-
T3'	0.6	2854	1220	980	1.73
	0.8	2802	1250	1003	1.78
	0.9	2784	1260	1011	1.79
	1	2762	1274	1018	1.81
	1.1	2739	1288	1026	1.83
	1.2	2712	1301	1037	1.85
	1.3	2685	1315	1047	1.87
	1.4	2657	1332	1062	1.89
	1.5	2628	1349	1076	1.92
	1.6	2596	1371	1094	1.95
	1.8	-	-	-	-
T4'	0.6	2518	1138	771	1.40
	0.8	2579	1177	797	1.44
	0.9	2557	1191	804	1.46
	1	2532	1209	814	1.48
	1.1	2506	1227	823	1.50
	1.2	2471	1245	836	1.53
	1.3	2436	1264	848	1.55
	1.4	2404	1285	862	1.58
	1.5	2373	1306	876	1.60
	1.6	2333	1332	901	1.63
	1.8	-	-	-	-
T5'	0.6	2889	1232	1022	1.80
	0.8	2839	1262	1044	1.84
	0.9	2821	1272	1052	1.86
	1	2799	1285	1059	1.87
	1.1	2776	1298	1066	1.89
	1.2	2751	1312	1076	1.91
	1.3	2726	1325	1087	1.93
	1.4	2698	1342	1101	1.96
	1.5	2670	1358	1116	1.98
	1.6	2639	1379	1131	2.01
	1.8	-	-	-	-

** In DSH0723W / DSH0724W / DSH0727W DOWNSHOT & HORIZONTAL Tables, T1, T1',T2, and T2' values are for part load only

Static Pressure

3-5 TONS		
DOWNFLOW ECONOMIZER PRESSURE DROP		
Cabinet	CFM	SP in.wg.
3 Ton	900	.03"
	1200	.05"
	1500	.08"
4 Ton	1200	.06"
	1600	.10"
	2000	.14"
5 Ton	1500	.08"
	2000	.14"
	2500	.22"
6 Ton	1800	.13"
	2400	.22"
	3000	.33"

3-5 TONS		
HORIZONTAL ECONOMIZER PRESSURE DROP		
Cabinet	CFM	SP in.wg.
3 Ton	900	.06"
	1200	.11"
	1500	.16"
4 Ton	1200	.11"
	1600	.19"
	2000	.29"
5 Ton	1500	.18"
	2000	.30"
	2500	.45"
6 Ton	1800	.24"
	2400	.41"
	3000	.61"

CONCENTRIC DIFFUSER 24 X 48 WITH 16" DIA COLLAR PRESSURE DROP		
Cabinet	CFM	DIFFUSER DP
3-6 Ton	1000	0.18
	1200	0.25
	1400	0.33
	1600	0.42
	1800	0.53
	2000	0.64

CONCENTRIC DIFFUSER 24 X 48 WITH 18"DIA COLLARPRESSURE DROP		
Cabinet	CFM	DIFFUSER DP
3-6 Ton	1000	0.14
	1200	0.20
	1400	0.26
	1600	0.33
	1800	0.41
	2000	0.50
	2400	0.68

INDOOR COIL PRESSURE DROP		
CABINET	CFM	DP (IN W.C)
3 Ton	1170	0.06
4 Ton	1600	0.13
5 Ton	1840	0.16
6 Ton	2370	0.16

Heating Data

DSH036*D — **100 % Capacity**

	OUTDOOR AMBIENT TEMPERATURE																
	65	60	55	50	47	45	40	35	30	25	20	17	15	10	5	0	-5
MBh	43.43	40.68	37.97	35.31	33.60	32.35	29.17	26.22	23.80	22.02	20.70	20.00	19.09	16.83	14.56	12.29	10.03
T/R	31.70	29.98	28.26	26.53	25.50	24.56	22.14	19.90	18.06	16.71	15.71	15.18	14.49	12.77	11.05	9.33	7.61
KW	2.91	2.86	2.81	2.76	2.74	2.72	2.67	2.62	2.57	2.52	2.47	2.44	2.42	2.37	2.33	2.28	2.23
AMPS	10.9	10.6	10.4	10.2	10.1	10.0	9.8	9.6	9.4	9.2	8.9	8.8	8.7	8.5	8.3	8.1	7.9
COP	4.37	4.16	3.96	3.74	3.60	3.49	3.21	2.93	2.71	2.56	2.46	2.40	2.31	2.08	1.84	1.58	1.32
Hi PR	377	365	353	340	333	328	316	304	291	279	267	259	254	242	230	218	205
LO PR	139	131	122	113	108	105	96	87	79	70	61	56	53	44	35	27	18

DSH048*D — **100 % Capacity**

	OUTDOOR AMBIENT TEMPERATURE																
	65	60	55	50	47	45	40	35	30	25	20	17	15	10	5	0	-5
MBh	58.66	54.83	51.07	47.37	45.00	43.24	38.78	34.68	31.33	28.84	26.99	26.00	24.73	21.57	18.40	15.23	12.07
T/R	33.05	31.20	29.34	27.49	26.37	25.34	22.73	20.32	18.36	16.90	15.82	15.24	14.49	12.64	10.78	8.93	7.07
KW	3.96	3.88	3.79	3.71	3.66	3.63	3.55	3.47	3.39	3.31	3.22	3.18	3.14	3.06	2.98	2.90	2.82
AMPS	14.2	13.8	13.5	13.1	12.9	12.8	12.4	12.1	11.7	11.4	11.0	10.8	10.7	10.3	10.0	9.6	9.2
COP	4.34	4.15	3.95	3.74	3.60	3.49	3.20	2.93	2.71	2.56	2.45	2.40	2.31	2.06	1.81	1.54	1.26
Hi PR	381	368	356	343	336	331	319	306	294	282	269	262	257	244	232	220	207
LO PR	137	128	120	111	106	103	94	86	77	69	60	55	52	43	35	26	18

DSH060*D — **100 % Capacity**

	OUTDOOR AMBIENT TEMPERATURE																
	65	60	55	50	47	45	40	35	30	25	20	17	15	10	5	0	-5
MBh	69.68	65.58	61.54	57.57	55.00	53.13	48.57	44.16	40.54	37.91	36.02	35.00	33.67	30.33	27.00	23.67	20.33
T/R	33.18	31.53	29.88	28.23	27.23	26.35	24.05	21.87	20.07	18.77	17.83	17.33	16.67	15.02	13.37	11.72	10.07
KW	4.60	4.57	4.53	4.50	4.48	4.46	4.43	4.40	4.36	4.33	4.29	4.27	4.26	4.23	4.19	4.16	4.12
AMPS	16.3	16.2	16.0	15.9	15.8	15.7	15.6	15.4	15.3	15.1	15.0	14.9	14.8	14.7	14.5	14.4	14.2
COP	4.44	4.21	3.98	3.75	3.60	3.49	3.21	2.94	2.72	2.57	2.46	2.40	2.32	2.10	1.89	1.67	1.44
Hi PR	374	362	349	337	330	325	313	301	289	277	264	257	252	240	228	216	204
LO PR	137	128	120	111	106	103	94	86	77	69	60	55	52	43	35	26	18

DSH072*D — **100 % Capacity**

	OUTDOOR AMBIENT TEMPERATURE																
	65	60	55	50	47	45	40	35	30	25	20	17	15	10	5	0	-5
MBh	87.78	81.95	76.23	70.60	67.00	64.30	57.48	51.24	46.14	42.35	39.52	38.00	36.07	31.23	26.40	21.57	16.73
T/R	32.84	30.96	29.08	27.20	26.07	25.01	22.36	19.93	17.95	16.48	15.37	14.78	14.03	12.15	10.27	8.39	6.51
KW	6.27	6.13	6.00	5.86	5.78	5.72	5.58	5.45	5.31	5.17	5.03	4.95	4.89	4.76	4.62	4.48	4.34
AMPS	23.5	22.9	22.3	21.7	21.3	21.1	20.5	19.9	19.3	18.7	18.1	17.7	17.5	16.9	16.3	15.7	15.1
COP	4.10	3.92	3.73	3.53	3.40	3.29	3.02	2.76	2.55	2.40	2.30	2.25	2.16	1.92	1.67	1.41	1.13
Hi PR	362	351	339	327	320	315	303	292	280	268	256	249	245	233	221	209	197
LO PR	135	127	118	110	105	102	93	85	76	68	60	54	51	43	34	26	17

DSH072*D — **70 % Capacity**

	OUTDOOR AMBIENT TEMPERATURE																
	65	60	55	50	47	45	40	35	30	25	20	17	15	10	5	0	-5
MBh	64.20	59.81	55.85	51.25	48.33	46.02	40.32	-	-	-	-	-	-	-	-	-	-
T/R	34.81	32.58	30.36	28.14	26.80	25.51	22.36	-	-	-	-	-	-	-	-	-	-
KW	3.82	3.69	3.55	3.42	3.34	3.28	3.15	-	-	-	-	-	-	-	-	-	-
AMPS	14.0	13.4	12.8	12.2	11.9	11.6	11.0	-	-	-	-	-	-	-	-	-	-
COP	4.92	4.75	4.61	4.40	4.25	4.11	3.75	-	-	-	-	-	-	-	-	-	-
Hi PR	351	340	328	317	310	306	294	-	-	-	-	-	-	-	-	-	-
LO PR	133	125	116	108	103	100	92	-	-	-	-	-	-	-	-	-	-

Calculations are based on nominal CFM and 70 °F indoor dry bulb.
Note: Shaded area is AHRI Rating Conditions at 47°F outdoor ambient temperature

Amps = Outdoor unit amps (comp.+fan)
kW = Total system power

Electrical Data

Model Number	Electrical Rating	Compressor			Outdoor Fan Motor			Indoor Fan Motor			Optional Electric Heat			Optional Powered Convienience Outlet	Optional Power Exhaust	Power Supply	
		QTY	RLA	LRA	QTY	HP	FLA	QTY	HP	FLA	PART #	KW*	FLA	FLA	FLA	MCA	MOP
DSH0361D	208/230/1/60	1	16.4	88.0	1	0.17	0.95	1	0.75	5.7	-	-	-	-	-	27.2/27.2	40/40
											-	-	-	9.6/8.7	-	36.8/35.9	50/50
											-	-	-	-	2.2/1.9 (1.7/1.5)	29.4/29.1	45/45
											-	-	-	9.6/8.7	2.2/1.9 (1.7/1.5)	39.0/37.8	50/50
											EH*D-1S05A	3.8/5.0	18.1/20.8	-	-	49.8/53.3	60/60
														9.6/8.7	-	59.4/62.0	70/70
														-	2.2/1.9 (1.7/1.5)	52.0/55.2	60/60
														9.6/8.7	2.2/1.9 (1.7/1.5)	61.6/63.9	70/70
											EH*D-1S10A	7.5/10.0	36.1/41.7	-	-	72.3/79.3	80/80
														9.6/8.7	-	81.9/88.0	90/90
														-	2.2/1.9 (1.7/1.5)	74.5/81.2	80/90
														9.6/8.7	2.2/1.9 (1.7/1.5)	84.1/89.9	90/90
											EH*D-1S15A	11.3/15.0	54.2/62.5	-	-	94.9/105	100/110
														9.6/8.7	-	105/114	110/125
														-	2.2/1.9 (1.7/1.5)	97.1/107	100/110
														9.6/8.7	2.2/1.9 (1.7/1.5)	107/116	110/125
DSH0363D	208/230/3/60	1	10.6	97.5	1	0.17	0.95	1	0.75	5.7	-	-	-	-	-	19.9/19.9	30/30
											-	-	-	9.6/8.7	-	29.5/28.6	40/35
											-	-	-	-	2.2/1.9 (1.7/1.5)	22.1/21.8	30/30
											-	-	-	9.6/8.7	2.2/1.9 (1.7/1.5)	31.7/30.5	40/40
											EH*D-3S05A	3.8/5.0	10.4/12.0	-	-	32.9/34.9	40/40
														9.6/8.7	-	42.5/43.6	50/50
														-	2.2/1.9 (1.7/1.5)	35.1/36.8	40/40
														9.6/8.7	2.2/1.9 (1.7/1.5)	44.7/45.5	50/50
											EH*D-3S10A	7.5/10.0	20.8/24.0	-	-	45.8/49.8	50/50
														9.6/8.7	-	55.4/58.5	60/60
														-	2.2/1.9 (1.7/1.5)	48.0/51.7	50/60
														9.6/8.7	2.2/1.9 (1.7/1.5)	57.6/60.4	60/70
											EH*D-3S15A	11.3/15.0	31.3/36.1	-	-	58.9/65.0	60/70
														9.6/8.7	-	68.5/73.7	70/80
														-	2.2/1.9 (1.7/1.5)	61.1/66.9	70/70
														9.6/8.7	2.2/1.9 (1.7/1.5)	70.7/75.6	80/80
DSH0363W	208/230/3/60	1	10.6	97.5	1	0.17	0.95	1	1.2	5.0	-	-	-	-	-	19.2/19.2	25/25
											-	-	-	9.6/8.7	-	28.8/27.9	35/35
											-	-	-	-	2.2/1.9 (1.7/1.5)	21.4/21.1	30/30
											-	-	-	9.6/8.7	2.2/1.9 (1.7/1.5)	31.0/29.8	40/35
											EH*D-3S05A	3.8/5.0	10.4/12.0	-	-	32.2/34.2	40/40
														9.6/8.7	-	41.8/42.9	45/50
														-	2.2/1.9 (1.7/1.5)	34.4/36.1	40/40
														9.6/8.7	2.2/1.9 (1.7/1.5)	44.0/44.8	50/50
											EH*D-3S10A	7.5/10.0	20.8/24.0	-	-	45.1/49.1	50/50
														9.6/8.7	-	54.7/57.8	60/60
														-	2.2/1.9 (1.7/1.5)	47.3/51.0	50/60
														9.6/8.7	2.2/1.9 (1.7/1.5)	56.9/59.7	60/60
											EH*D-3S15A	11.3/15.0	31.3/36.1	-	-	58.2/64.3	60/70
														9.6/8.7	-	67.8/73.0	70/80
														-	2.2/1.9 (1.7/1.5)	60.4/66.2	70/70
														9.6/8.7	2.2/1.9 (1.7/1.5)	70.0/74.9	80/80
DSH0364D	460/3/60	1	4.9	44.3	1	0.17	0.48	1	1.2	2.5	-	-	-	-	-	9.1	15
											-	-	-	4.3	-	13.4	15
											-	-	-	-	0.9 (0.5)	10.0	15
											-	-	-	4.3	0.9 (0.5)	14.3	15
											EH*D-4S05A	5.0	6.0	-	-	16.6	20
														4.3	-	20.9	25
														-	0.9 (0.5)	17.5	20
														4.3	0.9 (0.5)	21.8	25
											EH*D-4S10A	10.0	12.0	-	-	24.1	25
														4.3	-	28.4	30
														-	0.9 (0.5)	25.0	25
														4.3	0.9 (0.5)	29.3	30
											EH*D-4S15A	15.0	18.0	-	-	31.6	35
														4.3	-	35.9	40
														-	0.9 (0.5)	32.5	35
														4.3	0.9 (0.5)	36.8	40

Electrical Data

Model Number	Electrical Rating	Compressor			Outdoor Fan Motor			Indoor Fan Motor			Optional Electric Heat			Optional Powered Convienience Outlet	Optional Power Exhaust	Power Supply	
		QTY	RLA	LRA	QTY	HP	FLA	QTY	HP	FLA	PART #	KW*	FLA	FLA	FLA	MCA	MOP
DSH0364W	460/3/60	1	4.9	44.3	1	0.17	0.48	1	1.2	2.5	-	-	-	-	-	9.1	15
											-	-	-	4.3	-	13.4	15
											-	-	-	-	0.9 (0.5)	10.0	15
											-	-	-	4.3	0.9 (0.5)	14.3	15
											EH*D-4S05A	5.0	6.0	-	-	16.6	20
														4.3	-	20.9	25
														-	0.9 (0.5)	17.5	20
														4.3	0.9 (0.5)	21.8	25
											EH*D-4S10A	10.0	12.0	-	-	24.1	25
														4.3	-	28.4	30
														-	0.9 (0.5)	25.0	25
														4.3	0.9 (0.5)	29.3	30
											EH*D-4S15A	15.0	18.0	-	-	31.6	35
														4.3	-	35.9	40
														-	0.9 (0.5)	32.5	35
														4.3	0.9 (0.5)	36.8	40
DSH0367D	575/3/60	1	3.8	27.1	1	0.17	0.39	1	1.2	2.0	-	-	-	-	-	7.2	15
											-	-	-	3.5	-	10.7	15
											-	-	-	-	1.0	8.2	15
											-	-	-	3.5	1.0	11.7	15
											EH*D-7S05A	5.0	4.8	-	-	13.2	15
														3.5	-	16.7	20
														-	1.0	14.2	15
														3.5	1.0	17.7	20
											EH*D-7S10A	10.0	9.6	-	-	19.2	20
														3.5	-	22.7	25
														-	1.0	20.2	25
														3.5	1.0	23.7	25
											EH*D-7S15A	15.0	14.4	-	-	25.2	30
														3.5	-	28.7	30
														-	1.0	26.2	30
														3.5	1.0	29.7	30
DSH0367W	575/3/60	1	3.8	27.1	1	0.17	0.39	1	1.2	2.0	-	-	-	-	-	7.2	15
											-	-	-	3.5	-	10.7	15
											-	-	-	-	1.0	8.2	15
											-	-	-	3.5	1.0	11.7	15
											EH*D-7S05A	5.0	4.8	-	-	13.2	15
														3.5	-	16.7	20
														-	1.0	14.2	15
														3.5	1.0	17.7	20
											EH*D-7S10A	10.0	9.6	-	-	19.2	20
														3.5	-	22.7	25
														-	1.0	20.2	25
														3.5	1.0	23.7	25
											EH*D-7S15A	15.0	14.4	-	-	25.2	30
														3.5	-	28.7	30
														-	1.0	26.2	30
														3.5	1.0	29.7	30
DSH0481D	208/230/1/60	1	19.4	128	1	0.25	1.4	1	1.0	6.9	-	-	-	-	-	32.5/32.5	50/50
											-	-	-	9.6/8.7	-	42.1/41.2	60/60
											-	-	-	-	2.2/1.9 (1.7/1.5)	34.7/34.4	50/50
											-	-	-	9.6/8.7	2.2/1.9 (1.7/1.5)	44.3/43.1	60/60
											EH*D-1S05A	3.8/5.0	18.1/20.8	-	-	55.1/58.6	60/70
														9.6/8.7	-	64.7/67.3	70/80
														-	2.2/1.9 (1.7/1.5)	57.3/60.5	70/70
														9.6/8.7	2.2/1.9 (1.7/1.5)	66.9/69.2	80/80
											EH*D-1S10A	7.5/10.0	36.1/41.7	-	-	77.7/84.6	80/90
														9.6/8.7	-	87.3/93.3	90/100
														-	2.2/1.9 (1.7/1.5)	79.9/86.5	80/90
														9.6/8.7	2.2/1.9 (1.7/1.5)	89.5/95.2	90/100
											EH*D-1S15A	11.3/15.0	54.2/62.5	-	-	100/111	110/125
														9.6/8.7	-	110/119	110/125
														-	2.2/1.9 (1.7/1.5)	102/113	110/125
														9.6/8.7	2.2/1.9 (1.7/1.5)	112/121	125/125
											EH*D-1S20A	15.0/20.0	72.2/83.3	-	-	123/137	125/150
														9.6/8.7	-	132/145	150/150
														-	2.2/1.9 (1.7/1.5)	125/139	150/150
														9.6/8.7	2.2/1.9 (1.7/1.5)	135/147	150/150

Electrical Data

Model Number	Electrical Rating	Compressor			Outdoor Fan Motor			Indoor Fan Motor			Optional Electric Heat			Optional Powered Convienience Outlet	Optional Power Exhaust	Power Supply	
		QTY	RLA	LRA	QTY	HP	FLA	QTY	HP	FLA	PART #	KW*	FLA	FLA	FLA	MCA	MOP
DSH0483D	208/230/3/60	1	12.2	120	1	0.25	1.4	1	1.0	6.9	-	-	-	-	-	23.5/23.5	35/35
											-	-	-	9.6/8.7	-	33.1/32.2	45/40
											-	-	-	-	2.2/1.9 (1.7/1.5)	25.7/25.4	35/35
											-	-	-	9.6/8.7	2.2/1.9 (1.7/1.5)	35.3/34.1	45/45
											EH*D-3S05A	3.8/5.0	10.4/12.0	-	-	36.5/38.5	45/45
														9.6/8.7	-	46.1/47.2	50/50
														-	2.2/1.9 (1.7/1.5)	38.7/40.4	45/45
														9.6/8.7	2.2/1.9 (1.7/1.5)	48.3/49.1	50/50
											EH*D-3S10A	7.5/10.0	20.8/24.0	-	-	49.5/53.5	50/60
														9.6/8.7	-	59.1/62.2	60/70
														-	2.2/1.9 (1.7/1.5)	51.7/55.4	60/60
														9.6/8.7	2.2/1.9 (1.7/1.5)	61.3/64.1	70/70
											EH*D-3S15A	11.3/15.0	31.3/36.1	-	-	62.6/68.6	70/70
														9.6/8.7	-	72.2/77.3	80/80
														-	2.2/1.9 (1.7/1.5)	64.8/70.5	70/80
														9.6/8.7	2.2/1.9 (1.7/1.5)	74.4/79.2	80/80
											EH*D-3S20A	14.9/19.9	41.5/47.9	-	-	75.4/83.3	80/90
														9.6/8.7	-	85.0/92.0	90/100
														-	2.2/1.9 (1.7/1.5)	77.6/85.2	80/90
														9.6/8.7	2.2/1.9 (1.7/1.5)	87.2/93.9	90/100
DSH0483W	208/230/3/60	1	12.2	120	1	0.25	1.4	1	1.2	5.0	-	-	-	-	-	21.6/21.6	30/30
											-	-	-	9.6/8.7	-	31.2/30.3	40/40
											-	-	-	-	2.2/1.9 (1.7/1.5)	23.8/23.5	35/35
											-	-	-	9.6/8.7	2.2/1.9 (1.7/1.5)	33.4/32.2	45/40
											EH*D-3S05A	3.8/5.0	10.4/12.0	-	-	34.6/36.6	40/45
														9.6/8.7	-	44.2/45.3	50/50
														-	2.2/1.9 (1.7/1.5)	36.8/38.5	45/45
														9.6/8.7	2.2/1.9 (1.7/1.5)	46.4/47.2	50/50
											EH*D-3S10A	7.5/10.0	20.8/24.0	-	-	47.6/51.6	50/60
														9.6/8.7	-	57.2/60.3	60/70
														-	2.2/1.9 (1.7/1.5)	49.8/53.5	50/60
														9.6/8.7	2.2/1.9 (1.7/1.5)	59.4/62.2	60/70
											EH*D-3S15A	11.3/15.0	31.3/36.1	-	-	60.7/66.7	70/70
														9.6/8.7	-	70.3/75.4	80/80
														-	2.2/1.9 (1.7/1.5)	62.9/68.6	70/70
														9.6/8.7	2.2/1.9 (1.7/1.5)	72.5/77.3	80/80
											EH*D-3S20A	14.9/19.9	41.5/47.9	-	-	73.5/81.4	80/90
														9.6/8.7	-	83.1/90.1	90/100
														-	2.2/1.9 (1.7/1.5)	75.7/83.3	80/90
														9.6/8.7	2.2/1.9 (1.7/1.5)	85.3/92.0	90/100
DSH0484D	460/3/60	1	5.8	55.1	1	0.25	0.7	1	1.2	2.5	-	-	-	-	-	10.4	15
											-	-	-	4.3	-	14.7	20
											-	-	-	-	0.9 (0.5)	11.3	15
											-	-	-	4.3	0.9 (0.5)	15.6	20
											EH*D-4S05A	5.0	6.0	-	-	17.9	20
														4.3	-	22.2	25
														-	0.9 (0.5)	18.8	20
														4.3	0.9 (0.5)	23.1	25
											EH*D-4S10A	10.0	12.0	-	-	25.4	30
														4.3	-	29.7	30
														-	0.9 (0.5)	26.3	30
														4.3	0.9 (0.5)	30.6	35
											EH*D-4S15A	15.0	18.0	-	-	33.0	35
														4.3	-	37.3	40
														-	0.9 (0.5)	33.9	35
														4.3	0.9 (0.5)	38.2	40
											EH*D-4S20A	20.0	24.1	-	-	40.5	45
														4.3	-	44.8	45
														-	0.9 (0.5)	41.4	45
														4.3	0.9 (0.5)	45.7	50

Electrical Data

Model Number	Electrical Rating	Compressor			Outdoor Fan Motor			Indoor Fan Motor			Optional Electric Heat			Optional Powered Convienience Outlet	Optional Power Exhaust	Power Supply	
		QTY	RLA	LRA	QTY	HP	FLA	QTY	HP	FLA	PART #	KW*	FLA	FLA	FLA	MCA	MOP
DSH0484W	460/3/60	1	5.8	55.1	1	0.25	0.7	1	1.2	2.5	-	-	-	-	-	10.4	15
											-	-	-	4.3	-	14.7	20
											-	-	-	-	0.9 (0.5)	11.3	15
											-	-	-	4.3	0.9 (0.5)	15.6	20
											EH*D-4S05A	5.0	6.0	-	-	17.9	20
														4.3	-	22.2	25
														-	0.9 (0.5)	18.8	20
														4.3	0.9 (0.5)	23.1	25
											EH*D-4S10A	10.0	12.0	-	-	25.4	30
														4.3	-	29.7	30
														-	0.9 (0.5)	26.3	30
														4.3	0.9 (0.5)	30.6	35
											EH*D-4S15A	15.0	18.0	-	-	33.0	35
														4.3	-	37.3	40
														-	0.9 (0.5)	33.9	35
														4.3	0.9 (0.5)	38.2	40
											EH*D-4S20A	20.0	24.1	-	-	40.5	45
														4.3	-	44.8	45
														-	0.9 (0.5)	41.4	45
														4.3	0.9 (0.5)	45.7	50
DSH0487D	575/3/60	1	5.8	41.0	1	0.25	0.55	1	1.2	2.0	-	-	-	-	-	9.8	15
											-	-	-	3.5	-	13.3	15
											-	-	-	-	1.0	10.8	15
											-	-	-	3.5	1.0	14.3	20
											EH*D-7S05A	5.0	4.8	-	-	15.8	20
														3.5	-	19.3	20
														-	1.0	16.8	20
														3.5	1.0	20.3	25
											EH*D-7S10A	10.0	9.6	-	-	21.8	25
														3.5	-	25.3	30
														-	1.0	22.8	25
														3.5	1.0	26.3	30
											EH*D-7S15A	15.0	14.4	-	-	27.8	30
														3.5	-	31.3	35
														-	1.0	28.8	30
														3.5	1.0	32.3	35
											EH*D-7S20A	20.0	19.2	-	-	33.8	35
														3.5	-	37.3	40
														-	1.0	34.8	35
														3.5	1.0	38.3	40
DSH0487W	575/3/60	1	5.8	41.0	1	0.25	0.55	1	1.2	2.0	-	-	-	-	-	9.8	15
											-	-	-	3.5	-	13.3	15
											-	-	-	-	1.0	10.8	15
											-	-	-	3.5	1.0	14.3	20
											EH*D-7S05A	5.0	4.8	-	-	15.8	20
														3.5	-	19.3	20
														-	1.0	16.8	20
														3.5	1.0	20.3	25
											EH*D-7S10A	10.0	9.6	-	-	21.8	25
														3.5	-	25.3	30
														-	1.0	22.8	25
														3.5	1.0	26.3	30
											EH*D-7S15A	15.0	14.4	-	-	27.8	30
														3.5	-	31.3	35
														-	1.0	28.8	30
														3.5	1.0	32.3	35
											EH*D-7S20A	20.0	19.2	-	-	33.8	35
														3.5	-	37.3	40
														-	1.0	34.8	35
														3.5	1.0	38.3	40

Electrical Data

Model Number	Electrical Rating	Compressor			Outdoor Fan Motor			Indoor Fan Motor			Optional Electric Heat			Optional Powered Convienience Outlet	Optional Power Exhaust	Power Supply	
		QTY	RLA	LRA	QTY	HP	FLA	QTY	HP	FLA	PART #	KW*	FLA	FLA	FLA	MCA	MOP
DSH0601D	208/230/1/60	1	24.0	156	1	0.33	2.0	1	1.0	6.9	-	-	-	-	-	38.9/38.9	60/60
											-	-	-	9.6/8.7	-	48.5/47.6	70/70
											-	-	-	-	2.2/1.9 (1.7/1.5)	41.1/40.8	60/60
											-	-	-	9.6/8.7	2.2/1.9 (1.7/1.5)	50.7/49.5	70/70
											EH*D-1S05A	3.8/5.0	18.1/20.8	-	-	61.5/64.9	80/80
														9.6/8.7	-	71.1/73.6	90/90
														-	2.2/1.9 (1.7/1.5)	63.7/66.8	80/80
														9.6/8.7	2.2/1.9 (1.7/1.5)	73.3/75.5	90/90
											EH*D-1S10A	7.5/10.0	36.1/41.7	-	-	84.0/91.0	90/100
														9.6/8.7	-	93.6/99.7	100/110
														-	2.2/1.9 (1.7/1.5)	86.2/92.9	100/100
														9.6/8.7	2.2/1.9 (1.7/1.5)	95.8/102	110/110
											EH*D-1S15A	11.3/15.0	54.2/62.5	-	-	107/117	110/125
														9.6/8.7	-	116/126	125/150
														-	2.2/1.9 (1.7/1.5)	109/119	110/125
														9.6/8.7	2.2/1.9 (1.7/1.5)	118/128	125/150
											EH*D-1S20A	15.0/20.0	72.2/83.3	-	-	129/143	150/150
														9.6/8.7	-	139/152	150/175
														-	2.2/1.9 (1.7/1.5)	131/145	150/150
														9.6/8.7	2.2/1.9 (1.7/1.5)	141/154	150/175
DSH0603D	208/230/3/60	1	17.3	155	1	0.33	2.0	1	1.0	6.9	-	-	-	-	-	30.5/30.5	45/45
											-	-	-	9.6/8.7	-	40.1/39.2	50/50
											-	-	-	-	2.2/1.9 (1.7/1.5)	32.7/32.4	45/45
											-	-	-	9.6/8.7	2.2/1.9 (1.7/1.5)	42.3/41.1	50/50
											EH*D-3S05A	3.8/5.0	10.4/12.0	-	-	43.5/45.5	50/50
														9.6/8.7	-	53.1/54.2	60/60
														-	2.2/1.9 (1.7/1.5)	45.7/47.4	50/60
														9.6/8.7	2.2/1.9 (1.7/1.5)	55.3/56.1	60/70
											EH*D-3S10A	7.5/10.0	20.8/24.0	-	-	56.5/60.5	60/70
														9.6/8.7	-	66.1/69.2	70/80
														-	2.2/1.9 (1.7/1.5)	58.7/62.4	70/70
														9.6/8.7	2.2/1.9 (1.7/1.5)	68.3/71.1	70/80
											EH*D-3S15A	11.3/15.0	31.3/36.1	-	-	69.6/75.6	70/80
														9.6/8.7	-	79.2/84.3	80/90
														-	2.2/1.9 (1.7/1.5)	71.8/77.5	80/80
														9.6/8.7	2.2/1.9 (1.7/1.5)	81.4/86.2	90/90
											EH*D-3S20A	14.9/19.9	41.5/47.9	-	-	82.4/90.3	90/100
														9.6/8.7	-	92.0/99.0	100/100
														-	2.2/1.9 (1.7/1.5)	84.6/92.2	90/100
														9.6/8.7	2.2/1.9 (1.7/1.5)	94.2/101	100/110
DSH0603W	208/230/3/60	1	17.3	155	1	0.33	2.0	1	2.3	7.7	-	-	-	-	-	31.3/31.3	45/45
											-	-	-	9.6/8.7	-	40.9/40.0	50/50
											-	-	-	-	2.2/1.9 (1.7/1.5)	33.5/33.2	50/50
											-	-	-	9.6/8.7	2.2/1.9 (1.7/1.5)	43.1/41.9	50/50
											EH*D-3S05A	3.8/5.0	10.4/12.0	-	-	44.3/46.3	50/60
														9.6/8.7	-	53.9/55.0	60/60
														-	2.2/1.9 (1.7/1.5)	46.5/48.2	60/60
														9.6/8.7	2.2/1.9 (1.7/1.5)	56.1/56.9	70/70
											EH*D-3S10A	7.5/10.0	20.8/24.0	-	-	57.3/61.3	60/70
														9.6/8.7	-	66.9/70.0	70/80
														-	2.2/1.9 (1.7/1.5)	59.5/63.2	70/70
														9.6/8.7	2.2/1.9 (1.7/1.5)	69.1/71.9	80/80
											EH*D-3S15A	11.3/15.0	31.3/36.1	-	-	70.4/76.4	80/80
														9.6/8.7	-	80.0/85.1	80/90
														-	2.2/1.9 (1.7/1.5)	72.6/78.3	80/80
														9.6/8.7	2.2/1.9 (1.7/1.5)	82.2/87.0	90/90
											EH*D-3S20A	14.9/19.9	41.5/47.9	-	-	83.2/91.1	90/100
														9.6/8.7	-	92.8/99.8	100/100
														-	2.2/1.9 (1.7/1.5)	85.4/93.0	90/100
														9.6/8.7	2.2/1.9 (1.7/1.5)	95.0/102	100/110

Electrical Data

Model Number	Electrical Rating	Compressor			Outdoor Fan Motor			Indoor Fan Motor			Optional Electric Heat			Optional Powered Convienience Outlet	Optional Power Exhaust	Power Supply	
		QTY	RLA	LRA	QTY	HP	FLA	QTY	HP	FLA	PART #	KW*	FLA	FLA	FLA	MCA	MOP
DSH0604D	460/3/60	1	7.7	58.1	1	0.33	0.85	1	1.2	2.5	-	-	-	-	-	13.0	20
											-	-	-	4.3	-	17.3	20
											-	-	-	-	0.9 (0.5)	13.9	20
											-	-	-	4.3	0.9 (0.5)	18.2	25
											EH*D-4S05A	5.0	6.0	-	-	20.5	25
														4.3	-	24.8	30
														-	0.9 (0.5)	21.4	25
														4.3	0.9 (0.5)	25.7	30
											EH*D-4S10A	10.0	12.0	-	-	28.0	30
														4.3	-	32.3	35
														-	0.9 (0.5)	28.9	30
														4.3	0.9 (0.5)	33.2	35
											EH*D-4S15A	15.0	18.0	-	-	35.5	40
														4.3	-	39.8	40
														-	0.9 (0.5)	36.4	40
														4.3	0.9 (0.5)	40.7	45
											EH*D-4S20A	20.0	24.1	-	-	43.0	45
														4.3	-	47.3	50
														-	0.9 (0.5)	43.9	45
														4.3	0.9 (0.5)	48.2	50
DSH0604W	460/3/60	1	7.7	58.1	1	0.33	0.85	1	2.3	4.5	-	-	-	-	-	15.0	20
											-	-	-	4.3	-	19.3	25
											-	-	-	-	0.9 (0.5)	15.9	20
											-	-	-	4.3	0.9 (0.5)	20.2	25
											EH*D-4S05A	5.0	6.0	-	-	22.5	25
														4.3	-	26.8	30
														-	0.9 (0.5)	23.4	25
														4.3	0.9 (0.5)	27.7	30
											EH*D-4S10A	10.0	12.0	-	-	30.0	30
														4.3	-	34.3	35
														-	0.9 (0.5)	30.9	35
														4.3	0.9 (0.5)	35.2	40
											EH*D-4S15A	15.0	18.0	-	-	37.5	40
														4.3	-	41.8	45
														-	0.9 (0.5)	38.4	40
														4.3	0.9 (0.5)	42.7	45
											EH*D-4S20A	20.0	24.1	-	-	45.0	50
														4.3	-	49.3	50
														-	0.9 (0.5)	45.9	50
														4.3	0.9 (0.5)	50.2	60
DSH0607D	575/3/60	1	7.0	47.8	1	0.33	0.67	1	1.2	2.0	-	-	-	-	-	11.5	15
											-	-	-	3.5	-	15.0	20
											-	-	-	-	1.0	12.5	15
											-	-	-	3.5	1.0	16.0	20
											EH*D-7S05A	5.0	4.8	-	-	17.5	20
														3.5	-	21.0	25
														-	1.0	18.5	20
														3.5	1.0	22.0	25
											EH*D-7S10A	10.0	9.6	-	-	23.5	25
														3.5	-	27.0	30
														-	1.0	24.5	25
														3.5	1.0	28.0	30
											EH*D-7S15A	15.0	14.4	-	-	29.5	30
														3.5	-	33.0	35
														-	1.0	30.5	35
														3.5	1.0	34.0	35
											EH*D-7S20A	20.0	19.2	-	-	35.5	40
														3.5	-	39.0	40
														-	1.0	36.5	40
														3.5	1.0	40.0	45

Electrical Data

Model Number	Electrical Rating	Compressor			Outdoor Fan Motor			Indoor Fan Motor			Optional Electric Heat			Optional Powered Convienience Outlet	Optional Power Exhaust	Power Supply	
		QTY	RLA	LRA	QTY	HP	FLA	QTY	HP	FLA	PART #	KW*	FLA	FLA	FLA	MCA	MOP
DSH0607W	575/3/60	1	7.0	47.8	1	0.33	0.67	1	2.3	3.8	-	-	-	-	-	13.3	20
											-	-	-	3.5	-	16.8	20
											-	-	-	-	1.0	14.3	20
											-	-	-	3.5	1.0	17.8	20
											EH*D-7S05A	5.0	4.8	-	-	19.3	25
														3.5	-	22.8	25
														-	1.0	20.3	25
														3.5	1.0	23.8	25
											EH*D-7S10A	10.0	9.6	-	-	25.3	30
														3.5	-	28.8	30
														-	1.0	26.3	30
														3.5	1.0	29.8	30
											EH*D-7S15A	15.0	14.4	-	-	31.3	35
														3.5	-	34.8	35
														-	1.0	32.3	35
														3.5	1.0	35.8	40
											EH*D-7S20A	20.0	19.2	-	-	37.3	40
														3.5	-	40.8	45
														-	1.0	38.3	40
														3.5	1.0	41.8	45
DSH0723D	208/230/3/60	1	16.1	155	1	0.5	2.7	1	1.2	5.0	-	-	-	-	-	27.9/27.9	40/40
											-	-	-	9.6/8.7	-	37.5/36.6	50/50
											-	-	-	-	2.2/1.9 (1.7/1.5)	30.1/29.8	45/45
											-	-	-	9.6/8.7	2.2/1.9 (1.7/1.5)	39.7/38.5	50/50
											EH*D-3S05A	3.8/5.0	10.4/12.0	-	-	40.9/42.9	50/50
														9.6/8.7	-	50.5/51.6	60/60
														-	2.2/1.9 (1.7/1.5)	43.1/44.8	50/50
														9.6/8.7	2.2/1.9 (1.7/1.5)	52.7/53.5	60/60
											EH*D-3S10A	7.5/10.0	20.8/24.0	-	-	53.8/57.8	60/60
														9.6/8.7	-	63.4/66.5	70/70
														-	2.2/1.9 (1.7/1.5)	56.0/59.7	60/60
														9.6/8.7	2.2/1.9 (1.7/1.5)	65.6/68.4	70/70
											EH*D-3S15A	11.3/15.0	31.3/36.1	-	-	67.0/73.0	70/80
														9.6/8.7	-	76.6/81.7	80/90
														-	2.2/1.9 (1.7/1.5)	69.2/74.9	70/80
														9.6/8.7	2.2/1.9 (1.7/1.5)	78.8/83.6	80/90
											EH*D-3S20A	14.9/19.9	41.5/47.9	-	-	79.7/87.7	80/90
														9.6/8.7	-	89.3/96.4	90/100
														-	2.2/1.9 (1.7/1.5)	81.9/89.6	90/90
														9.6/8.7	2.2/1.9 (1.7/1.5)	91.5/98.3	100/100
											EH*D-3S30A	22.5/30.0	62.5/72.2	-	-	106/118	110/125
														9.6/8.7	-	116/127	125/150
														-	2.2/1.9 (1.7/1.5)	108/120	110/125
														9.6/8.7	2.2/1.9 (1.7/1.5)	118/129	125/150
DSH0723W	208/230/3/60	1	16.1	155	1	0.5	2.7	1	2.3	7.7	-	-	-	-	-	30.6/30.6	45/45
											-	-	-	9.6/8.7	-	40.2/39.3	50/50
											-	-	-	-	2.2/1.9 (1.7/1.5)	32.8/32.5	45/45
											-	-	-	9.6/8.7	2.2/1.9 (1.7/1.5)	42.4/41.2	50/50
											EH*D-3S05A	3.8/5.0	10.4/12.0	-	-	43.6/45.6	50/50
														9.6/8.7	-	53.2/54.3	60/60
														-	2.2/1.9 (1.7/1.5)	45.8/47.5	50/60
														9.6/8.7	2.2/1.9 (1.7/1.5)	55.4/56.2	60/60
											EH*D-3S10A	7.5/10.0	20.8/24.0	-	-	56.5/60.5	60/70
														9.6/8.7	-	66.1/69.2	70/70
														-	2.2/1.9 (1.7/1.5)	58.7/62.4	60/70
														9.6/8.7	2.2/1.9 (1.7/1.5)	68.3/71.1	70/80
											EH*D-3S15A	11.3/15.0	31.3/36.1	-	-	69.7/75.7	70/80
														9.6/8.7	-	79.3/84.4	80/90
														-	2.2/1.9 (1.7/1.5)	71.9/77.6	80/80
														9.6/8.7	2.2/1.9 (1.7/1.5)	81.5/86.3	90/90
											EH*D-3S20A	14.9/19.9	41.5/47.9	-	-	82.4/90.4	90/100
														9.6/8.7	-	92.0/99.1	100/100
														-	2.2/1.9 (1.7/1.5)	84.6/92.3	90/100
														9.6/8.7	2.2/1.9 (1.7/1.5)	94.2/101	100/110
											EH*D-3S30B	22.5/30.0	62.5/72.2	-	-	109/121	110/125
														9.6/8.7	-	118/129	125/150
														-	2.2/1.9 (1.7/1.5)	111/123	125/125
														9.6/8.7	2.2/1.9 (1.7/1.5)	121/131	125/150

Electrical Data

Model Number	Electrical Rating	Compressor			Outdoor Fan Motor			Indoor Fan Motor			Optional Electric Heat			Optional Powered Convienience Outlet	Optional Power Exhaust	Power Supply	
		QTY	RLA	LRA	QTY	HP	FLA	QTY	HP	FLA	PART #	KW*	FLA	FLA	FLA	MCA	MOP
DSH0724D	460/3/60	1	7.0	70.8	1	0.5	1.4	1	1.2	2.5	-	-	-	-	-	12.7	15
											-	-	-	4.3	-	17.0	20
											-	-	-	-	0.9 (0.5)	13.6	20
											-	-	-	4.3	0.9 (0.5)	17.9	20
											EH*D-4S05A	5.0	6.0	-	-	20.2	25
														4.3	-	24.5	30
														-	0.9 (0.5)	21.1	25
														4.3	0.9 (0.5)	25.4	30
											EH*D-4S10A	10.0	12.0	-	-	27.7	30
														4.3	-	32.0	35
														-	0.9 (0.5)	28.6	30
														4.3	0.9 (0.5)	32.9	35
											EH*D-4S15A	15.0	18.0	-	-	35.3	40
														4.3	-	39.6	40
														-	0.9 (0.5)	36.2	40
														4.3	0.9 (0.5)	40.5	45
											EH*D-4S20A	20.0	24.1	-	-	42.8	45
														4.3	-	47.1	50
														-	0.9 (0.5)	43.7	45
														4.3	0.9 (0.5)	48.0	50
											EH*D-4S30A	30.0	36.1	-	-	57.8	60
														4.3	-	62.1	70
														-	0.9 (0.5)	58.7	60
														4.3	0.9 (0.5)	63.0	70
DSH0724W	460/3/60	1	7.0	70.8	1	0.5	1.4	1	2.3	4.5	-	-	-	-	-	14.7	20
											-	-	-	4.3	-	19.0	25
											-	-	-	-	0.9 (0.5)	15.6	20
											-	-	-	4.3	0.9 (0.5)	19.9	25
											EH*D-4S05A	5.0	6.0	-	-	22.2	25
														4.3	-	26.5	30
														-	0.9 (0.5)	23.1	25
														4.3	0.9 (0.5)	27.4	30
											EH*D-4S10A	10.0	12.0	-	-	29.7	30
														4.3	-	34.0	35
														-	0.9 (0.5)	30.6	35
														4.3	0.9 (0.5)	34.9	35
											EH*D-4S15A	15.0	18.0	-	-	37.3	40
														4.3	-	41.6	45
														-	0.9 (0.5)	38.2	40
														4.3	0.9 (0.5)	42.5	45
											EH*D-4S20A	20.0	24.1	-	-	44.8	45
														4.3	-	49.1	50
														-	0.9 (0.5)	45.7	50
														4.3	0.9 (0.5)	50.0	50
											EH*D-4S30B	30.0	36.1	-	-	59.8	60
														4.3	-	64.1	70
														-	0.9 (0.5)	60.7	70
														4.3	0.9 (0.5)	65.0	70
DSH0727D	575/3/60	1	6.0	58.2	1	0.5	1.0	1	1.2	2.0	-	-	-	-	-	10.5	15
											-	-	-	3.5	-	14.0	20
											-	-	-	-	1.0	11.5	15
											-	-	-	3.5	1.0	15.0	20
											EH*D-7S05A	5.0	4.8	-	-	16.5	20
														3.5	-	20.0	25
														-	1.0	17.5	20
														3.5	1.0	21.0	25
											EH*D-7S10A	10.0	9.6	-	-	22.5	25
														3.5	-	26.0	30
														-	1.0	23.5	25
														3.5	1.0	27.0	30
											EH*D-7S15A	15.0	14.4	-	-	28.6	30
														3.5	-	32.1	35
														-	1.0	29.6	30
														3.5	1.0	33.1	35
											EH*D-7S20A	20.0	19.2	-	-	34.6	35
														3.5	-	38.1	40
														-	1.0	35.6	40
														3.5	1.0	39.1	40
											EH*D-7S30A	30.0	28.9	-	-	46.6	50
														3.5	-	50.1	60
														-	1.0	47.6	50
														3.5	1.0	51.1	60

Electrical Data

Model Number	Electrical Rating	Compressor			Outdoor Fan Motor			Indoor Fan Motor			Optional Electric Heat			Optional Powered Convienience Outlet	Optional Power Exhaust	Power Supply	
		QTY	RLA	LRA	QTY	HP	FLA	QTY	HP	FLA	PART #	KW*	FLA	FLA	FLA	MCA	MOP
DSH0727W	575/3/60	1	6.0	58.2	1	0.5	1.0	1	2.3	3.8	-	-	-	-	-	12.3	15
											-	-	-	3.5	-	15.8	20
											-	-	-	-	1.0	13.3	15
											-	-	-	3.5	1.0	16.8	20
											EH*D-7S05A	5.0	4.8	-	-	18.3	20
														3.5	-	21.8	25
														-	1.0	19.3	20
														3.5	1.0	22.8	25
											EH*D-7S10A	10.0	9.6	-	-	24.3	25
														3.5	-	27.8	30
														-	1.0	25.3	30
														3.5	1.0	28.8	30
											EH*D-7S15A	15.0	14.4	-	-	30.4	35
														3.5	-	33.9	35
														-	1.0	31.4	35
														3.5	1.0	34.9	35
											EH*D-7S20A	20.0	19.2	-	-	36.4	40
														3.5	-	39.9	40
														-	1.0	37.4	40
														3.5	1.0	40.9	45
											EH*D-7S30B	30.0	28.9	-	-	48.4	50
														3.5	-	51.9	60
														-	1.0	49.4	50
														3.5	1.0	52.9	60

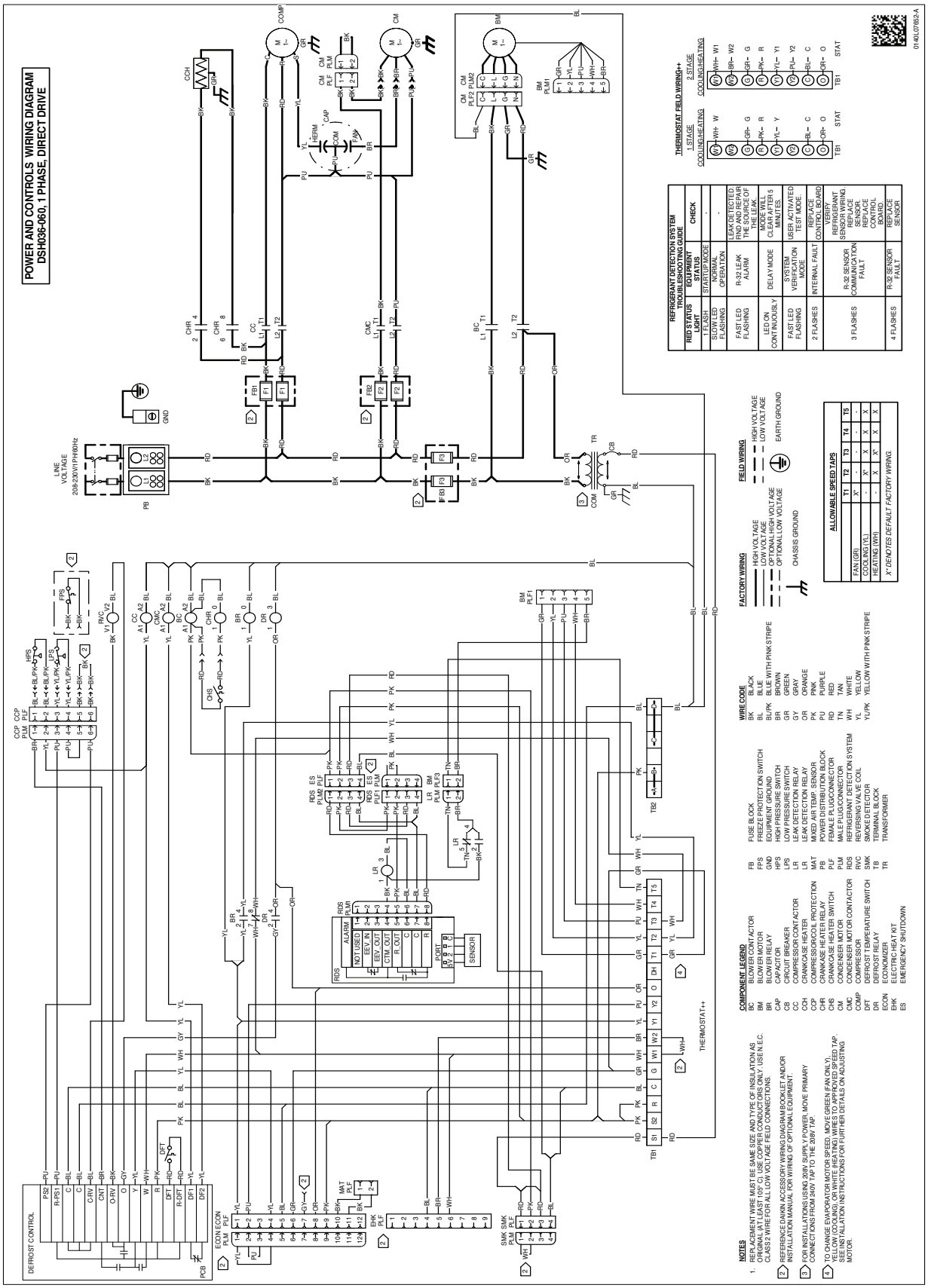

WARNING

High Voltage: Disconnect all power before servicing or installing this unit. Multiple power sources may be present. Failure to do so may cause property damage, personal injury, or death.

Wiring is subject to change. Always refer to the wiring diagram on the unit for the most up-to-date wiring.

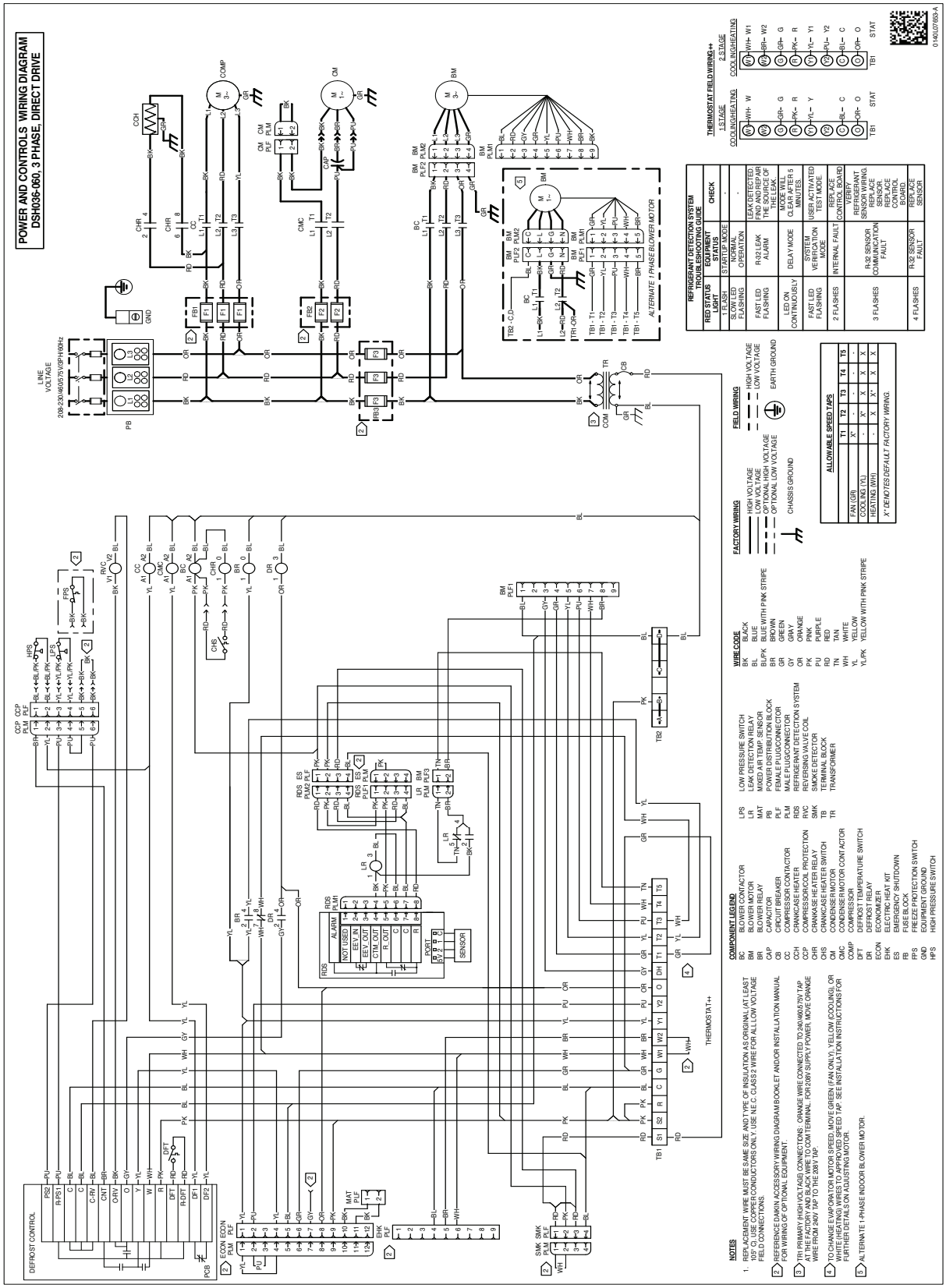

WARNING

High Voltage: Disconnect all power before servicing or installing this unit. Multiple power sources may be present. Failure to do so may cause property damage, personal injury, or death.

Wiring is subject to change. Always refer to the wiring diagram on the unit for the most up-to-date wiring.

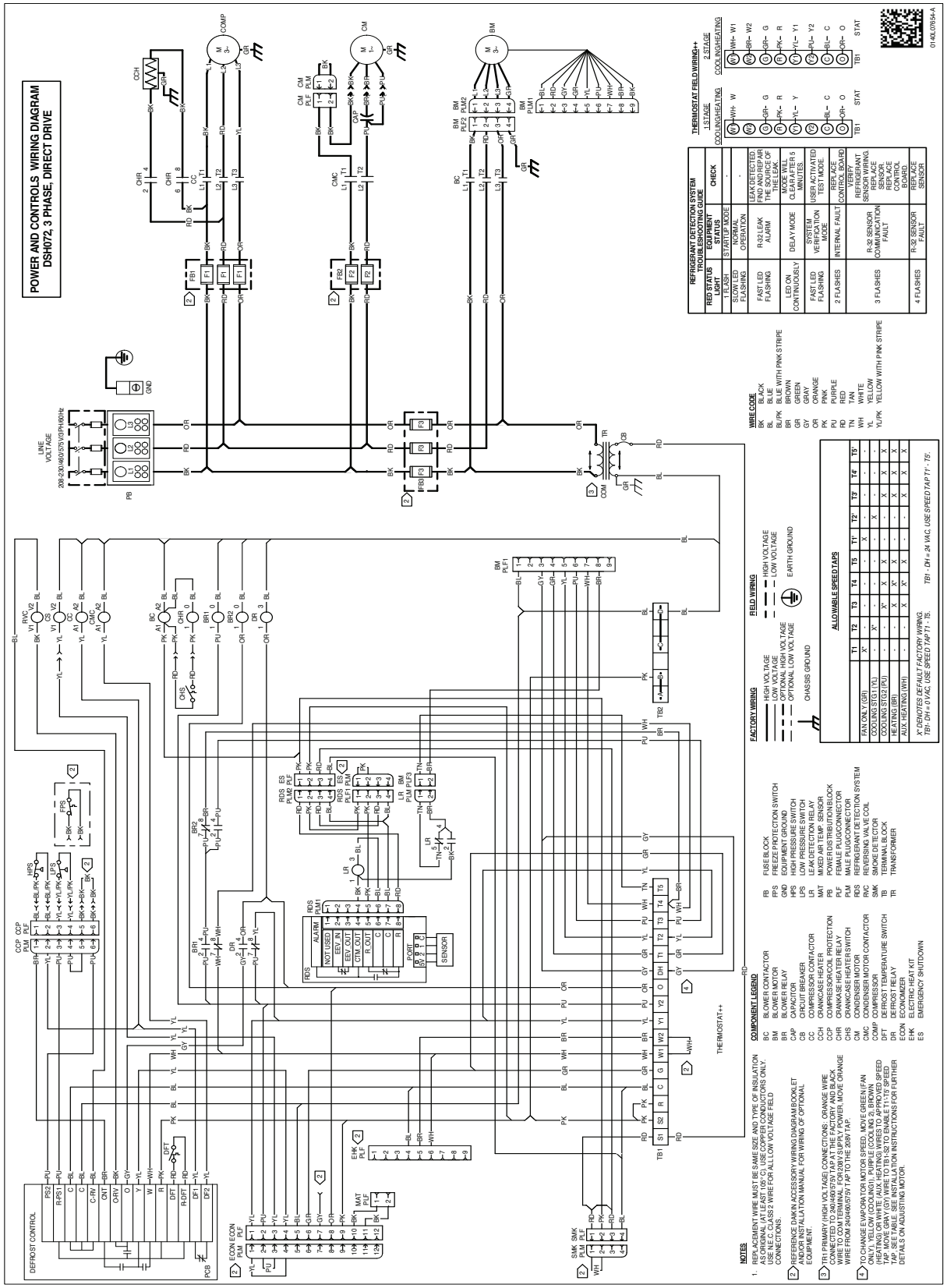

WARNING

High Voltage: Disconnect all power before servicing or installing this unit. Multiple power sources may be present. Failure to do so may cause property damage, personal injury, or death.

Wiring is subject to change. Always refer to the wiring diagram on the unit for the most up-to-date wiring.

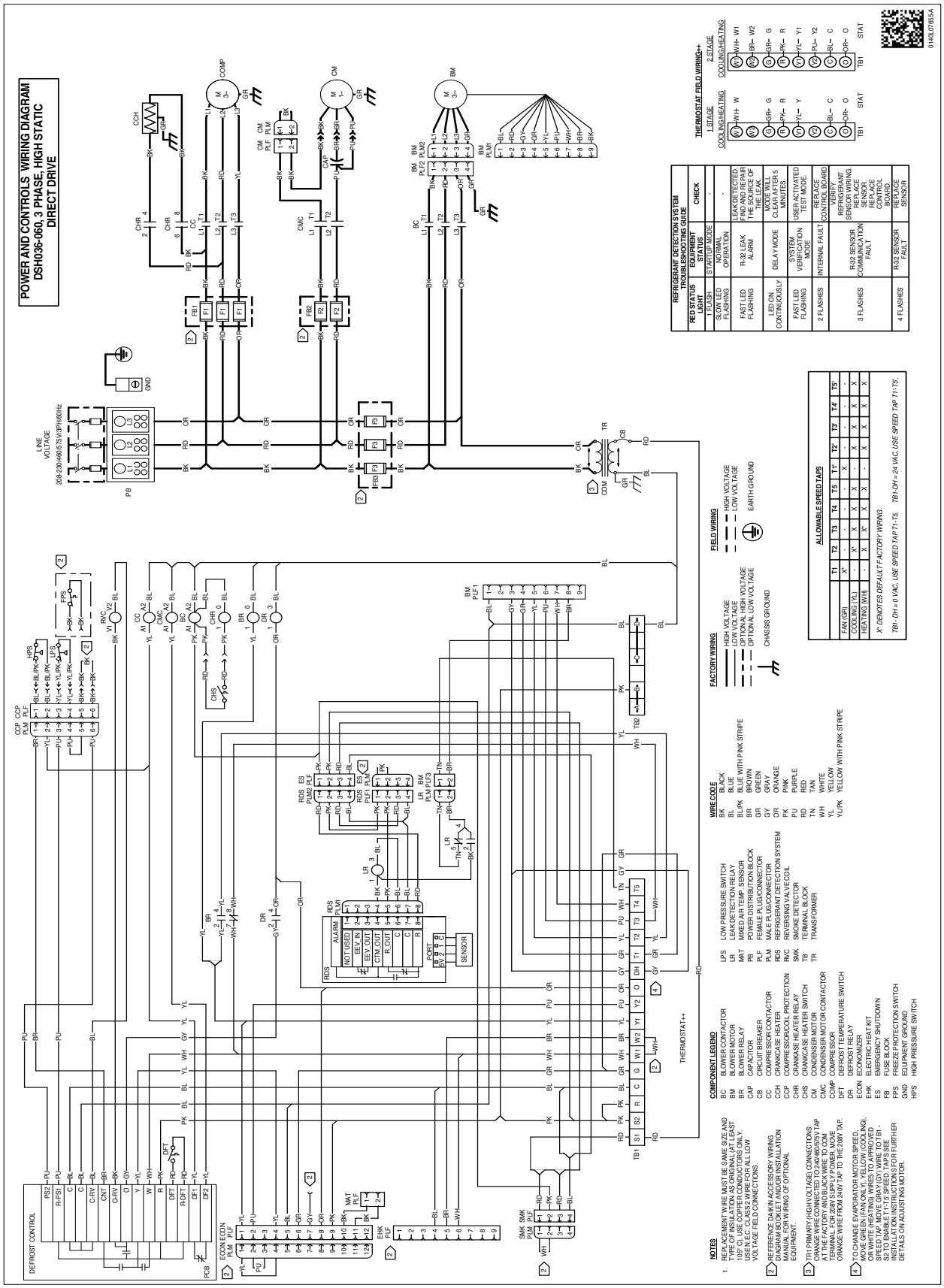
POWER AND CONTROLS WIRING DIAGRAM
DSH036-060, 3 PHASE, HIGH STATIC
DIRECT DRIVE
LINE VOLTAGE
208-230/460/575V3PH60Hz
COMP
CM
BM
CCH
CHR
CC
CMC
CAP
BC
GND
PB
FB1
FB2
FB3
F1
F2
F3
CCP PLM
CCP PLF
HPS
FPS
RVC
DFT
DEFROST CONTROL
ECON PLM
ECON PLF
MAT PLF
EHK PLF
SMK PLM
SMK PLF
RDS PLM
RDS PLF
RDS ES PLM2
RDS ES PLF2
LR PLM
LR PLF
LR BM PLM
LR BM PLF
BM PLF-1
BM PLM
BM PLF2
CM PLM
CM PLF
TB1
TB2
TB3
THERMOSTAT++
PCB
COM
TR
CB
ALARM
NOT USED
EEV IN
EEV OUT
CTM OUT
R OUT
PORT
SENSOR
THERMOSTAT FIELD WIRING++
1 STAGE
2 STAGE
COOLING/HEATING
STAT
REFRIGERANT DETECTION SYSTEM TROUBLESHOOTING GUIDE
RED STATUS LIGHT
EQUIPMENT STATUS
CHECK
1 FLASH
STARTUP MODE
SLOW LED FLASHING
NORMAL OPERATION
FAST LED FLASHING
R-32 LEAK ALARM
LEAK DETECTED. FIND AND REPAIR THE SOURCE OF LEAK
LED ON CONTINUOUSLY
DELAY MODE
MODE WILL CLEAR AFTER 5 MINUTES.
FAST LED FLASHING
SYSTEM VERIFICATION MODE
USER ACTIVATED TEST MODE
2 FLASHES
INTERNAL FAULT
REPLACE CONTROL BOARD
3 FLASHES
R-32 SENSOR COMMUNICATION FAULT
REFRIGERANT SENSOR WIRING. REPLACE SENSOR. REPLACE CONTROL BOARD.
4 FLASHES
R-32 SENSOR FAULT
REPLACE SENSOR
ALLOWABLE SPEED TAPS
FAN (GR)
COOLING (YL)
HEATING (WH)
X* DENOTES DEFAULT FACTORY WIRING.
TB1- DH = 0 VAC, USE SPEED TAP T1-T5
TB1-DH = 24 VAC, USE SPEED TAP T1-T5
FACTORY WIRING
HIGH VOLTAGE
LOW VOLTAGE
OPTIONAL HIGH VOLTAGE
OPTIONAL LOW VOLTAGE
CHASSIS GROUND
FIELD WIRING
HIGH VOLTAGE
LOW VOLTAGE
EARTH GROUND
WIRE CODE
BK BLACK
BL BLUE
BL/PK BLUE WITH PINK STRIPE
BR BROWN
GR GREEN
GY GRAY
OR ORANGE
PK PINK
PU PURPLE
RD RED
TAN TAN
WH WHITE
YL YELLOW
YL/PK YELLOW WITH PINK STRIPE
COMPONENT LEGEND
BC BLOWER CONTACTOR
BM BLOWER MOTOR
BR BLOWER RELAY
CAP CAPACITOR
CB CIRCUIT BREAKER
CC COMPRESSOR CONTACTOR
CCH CRANKCASE HEATER
CCP COMPRESSOR/COIL PROTECTION
CHR CRANKCASE HEATER RELAY
CHS CRANKCASE HEATER SWITCH
CM CONDENSER MOTOR
CMC CONDENSER MOTOR CONTACTOR
COMP COMPRESSOR
DFT DEFROST TEMPERATURE SWITCH
DR DEFROST RELAY
ECON ECONOMIZER
EHK ELECTRIC HEAT KIT
ES EMERGENCY SHUTDOWN
FB FUSE BLOCK
FPS FREEZE PROTECTION SWITCH
GND EQUIPMENT GROUND
HPS HIGH PRESSURE SWITCH
LPS LOW PRESSURE SWITCH
LR LEAK DETECTION RELAY
MAT MIXED AIR TEMP. SENSOR
PB POWER DISTRIBUTION BLOCK
PLF FEMALE PLUG CONNECTOR
PLM MALE PLUG CONNECTOR
RVC REVERSING VALVE COIL
RDS REFRIGERANT DETECTION SYSTEM
SMK SMOKE DETECTOR
TB TERMINAL BLOCK
TR TRANSFORMER
NOTES
1. REPLACEMENT WIRE MUST BE SAME SIZE AND TYPE OF INSULATION AS ORIGINAL(AT LEAST 105° C). USE COPPER CONDUCTORS ONLY. TIGHTEN ALL ELECTRICAL CONNECTIONS. ALL LOW VOLTAGE FIELD CONNECTIONS.
2 REFERENCE DAIKIN ACCESSORY WIRING DIAGRAM BOOKLET AND/OR INSTALLATION MANUAL FOR WIRING OF OPTIONAL EQUIPMENT.
3 TR1 PRIMARY (HIGH VOLTAGE) CONNECTIONS: ORANGE WIRE CONNECTED TO 240/460/575V TAP AT THE FACTORY AND BLACK WIRE TO COM TERMINAL FOR 208/230V. CHANGE BLACK WIRE ORANGE WIRE FROM 240/ TAP TO THE 208/ TAP.
4 TO CHANGE EVAPORATOR MOTOR SPEED, MOVE GREEN WIRE (FAN/COOLING), OR WHITE (HEATING) WIRES TO APPROVED SPEED TAP. MOVE GRAY (GY) WIRE TO TB1 - TERMINAL FOR 208/230 VOLT APPLICATION. INSTALL ELECTRICAL TAPE ON EITHER DETAILS ON ADJUSTING MOTOR.
WARNING
High Voltage: Disconnect all power before servicing or installing this unit. Multiple power sources may be present. Failure to do so may cause property damage, personal injury, or death.
Wiring is subject to change. Always refer to the wiring diagram on the unit for the most up-to-date wiring.
014L07665A

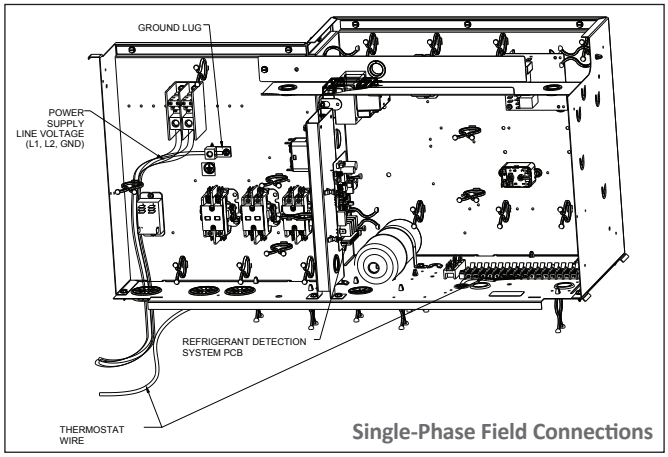

Single-Phase Field Connections

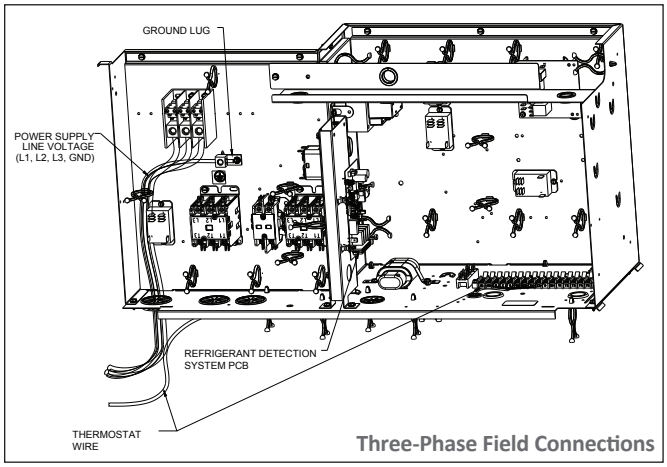

Three-Phase Field Connections

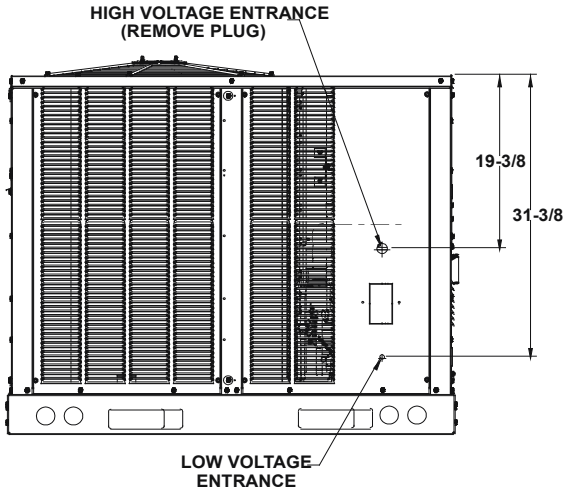

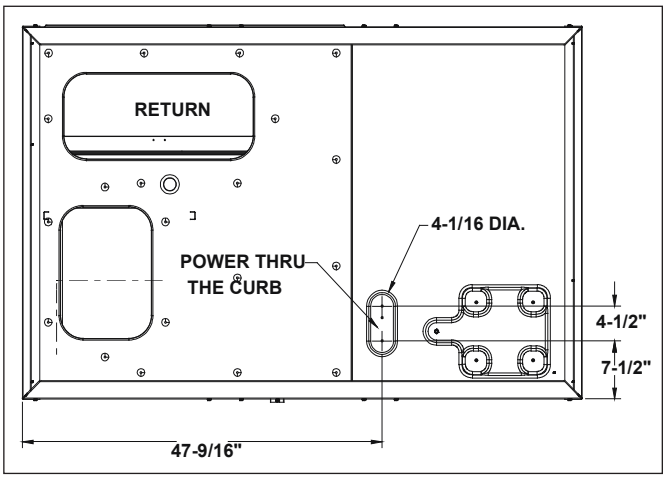

ELECTRICAL ENTRANCE AND THRU CURB (BOTOM VIEW OF UNIT)

Unit Clearances

Service Clearance

Allow for recommended service clearances as shown in figure to the right. In situations that have multiple units, a 36” minimum clearance is required between the condenser coils. A clearance of 48” is recommended on all sides of the unit to allow service access and to ensure proper ventilation and condenser airflow. The top of the unit should be unobstructed. Provide a roof walkway along the sides of the unit for service and access to controls and components. Contact your Daikin sales representative for service requirements less than those recommended.

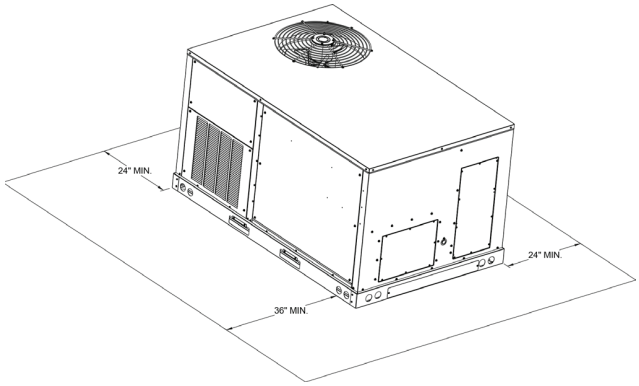

Unit Clearances

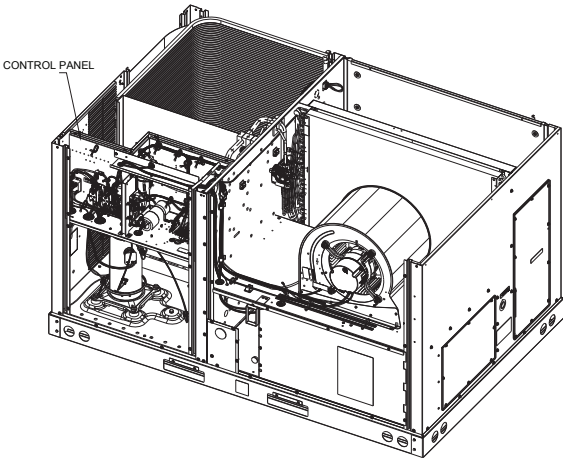

Power and Low Voltage Block Connections

Unit Location

The structural engineer must verify that the roof has adequate support and ability to minimize deflection. Take extreme caution when using on a wooden roof structure. Unit condenser coils should be in a location that avoids any heated exhaust air.

Allow sufficient space around the unit for maintenance/service clearance. Consult your Daikin sales representative if available clearances do not meet minimum recommendations.

Where code considerations, such as the NEC, require extended clearances, these take precedence.

Provisions for forks have been included in the unit base frame. No other fork locations are approved.

» Unit must be lifted by the four lifting holes located at the base frame corners.

» Lifting cables should be attached to the unit with shackles.

» The distance between the crane hook and the top of the unit must not be less than 60".

» Two spreader bars must span over the unit to prevent damage to the cabinet by the lift cables. Spreader bars must be of sufficient length so that cables do not come in contact with the unit during transport. Remove wood struts mounted beneath unit base frame before setting unit on roof curb. These struts are intended to protect unit base frame from forklift damage. To remove the struts, extract the sheet metal retainers and pull the struts through the base of the unit. Refer to rigging label on the unit.

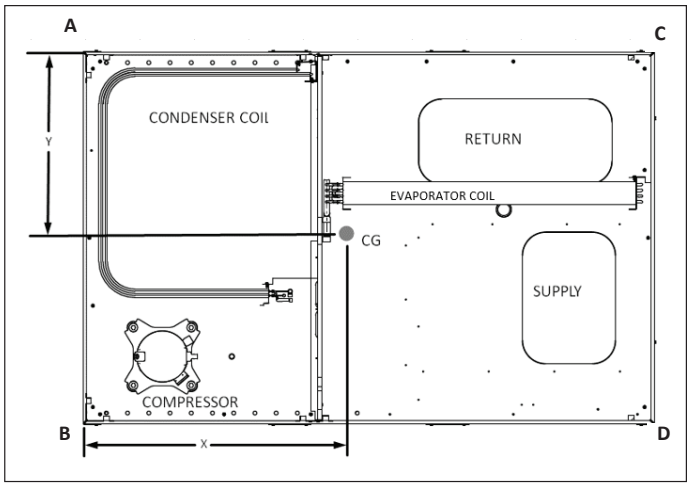

Corner & Center-of-Gravity Locations

Important: If using bottom discharge with roof curb, ductwork should be attached to the curb prior to installing the unit. Refer to the Roof Curb Installation Instructions for proper curb installation. Curbing must be installed in compliance with the National Roofing Contractors Association Manual. Lower unit carefully onto roof mounting curb. While rigging the unit, the center of gravity will cause the condenser end to be lower than the supply air end. Bring condenser end of unit into alignment with the curb. With condenser end of the unit resting on curb member and using curb as a fulcrum, lower opposite end of the unit until entire unit is seated on the curb. When a rectangular cantilever curb is used, take care to center the unit. Check for proper alignment and orientation of supply and return openings with duct.

Roof Curb Installation

The roof curb is field-assembled and must be installed level (within 1/16" per foot side to side). A sub-base must be constructed by the contractor in applications involving pitched roofs. Gaskets are furnished and must be installed between the unit and curb. For proper installation, follow NRCA guidelines. In applications requiring post and rail installation, an I-beam securely mounted on multiple posts should support the unit on each side. In addition, the insulation on the underside of the unit should be protected from the elements. Applications in geographic areas subjected to seismic or hurricane conditions must meet code requirements for fastening the unit to the curb and the curb to the building structure. For further and more detailed information please refer to our Daikin Light Commercial Packaged unit IOD.

Weights

Model	Shipping Weight (lbs)	Operating Weight (lbs)	Corner Weights (lbs)				Length	Width
			A	B	C	D	X (in)	Y (in)
DSH0361D	606	536	95	194	103	144	34 1/10	26
DSH0363D	605	535	95	193	103	144	34 1/8	26
DSH0364D	613	543	95	194	103	151	34 3/8	25 1/2
DSH0367D	613	543	95	194	103	151	34 3/8	25 1/2
DSH0481D	657	587	95	221	109	162	34 1/8	26
DSH0483D	652	582	95	216	109	162	34 1/8	25 5/8
DSH0484D	656	586	95	216	109	166	34 1/2	25 5/8
DSH0487D	656	586	95	216	109	166	34 1/2	25 5/8
DSH0601D	670	600	101	225	112	162	33 3/8	26 1/8
DSH0603D	666	596	101	221	112	162	34	26 1/10
DSH0604D	670	600	101	221	112	166	34 1/8	25 9/10
DSH0607D	670	600	101	221	112	166	34 1/8	25 9/10
DSH0723D	715	645	110	242	122	171	33 3/8	26 5/8
DSH0724D	715	645	110	242	122	171	33 3/8	26 5/8
DSH0727D	715	645	110	242	122	171	33 3/8	26 5/8

For details on accessories refer to document **PM-LC-ACCESSORIES**

Notes

Notes

Notes

Our continuing commitment to quality products may mean a change in specifications without notice.
©2025 DAIKIN COMFORT TECHNOLOGIES MANUFACTURING, INC. • Houston, Texas • Printed in the USA.